EZ Dock® Floating Docks

Owner´s Manual and Installation Instructions

Models 208010, 206010, 204010, 204060, 260120

For questions about features, operation/performance, parts, accessories or installation, call your local EZ Dock® distributor or dealer.

Additional information regarding EZ Dock products can be found on the internet at www.ezdock.com.

The first dock of its kind...The last dock you will ever need®.

EZ Port

WHICH EZ PORT IS RIGHT FOR YOU?

EZ Port® revolutionized docking and launching with the original drive-on PWC lift. Choose between three EZ Port models; EZ Port 2, EZ Port 3 and the new EZ Port MAX to meet your porting and personal watercraft's needs.

Adjustable greasable rollers, a patented pylon system for stability and safety on the water and a large textured walking surface make the EZ Port series of PWC lifts the easiest drive-on, push-off method of dry docking.

Visit ez-dock.com to learn about the EZ Port series from EZ Dock® and to locate your nearest dealer.

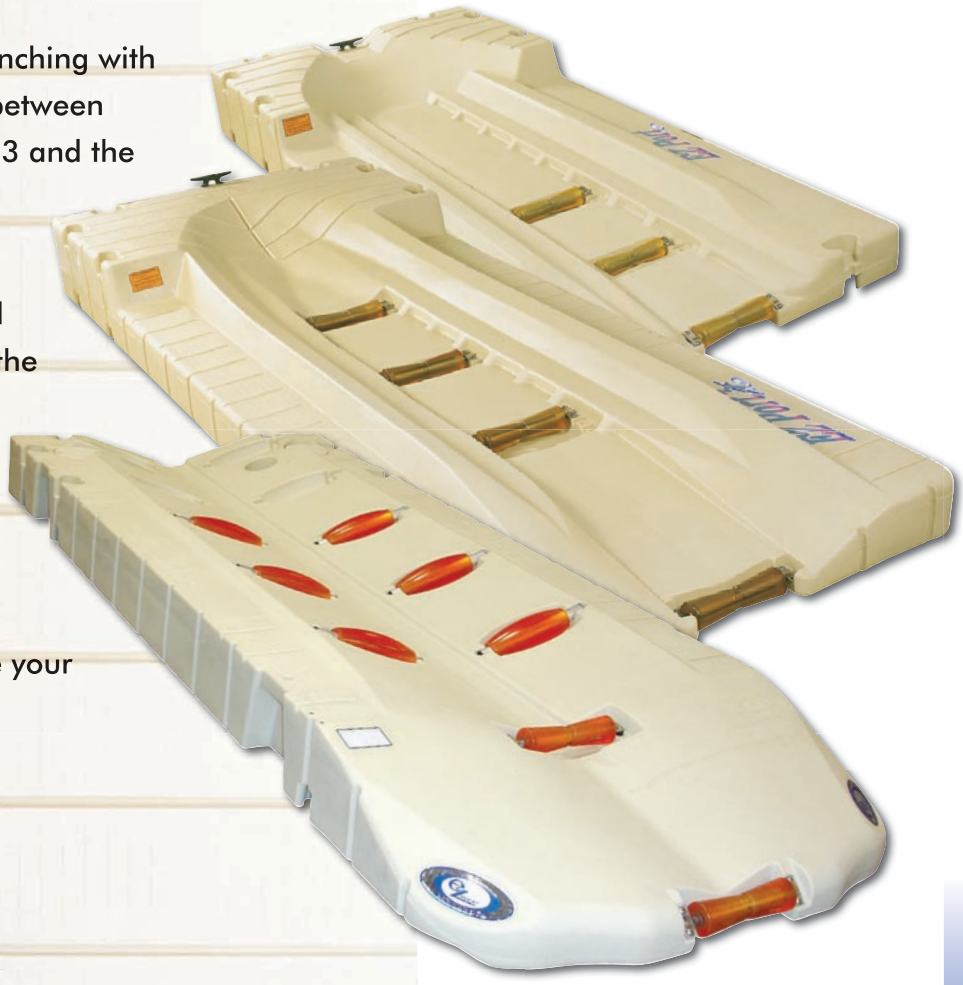

EZ DOCK®

The First Dock of Its Kind.

THE LAST DOCK YOU WILL EVER NEED.®

Table of Contents

General Information and Installation Overview 4
EZDock Specifications. 5
1 Model/Serial Number. 4
2 Site Preparation. 4
3 Dock Section Orientation Coupler and Installation 5
4 Selecting Your Anchoring. 6
5 Pipe Anchoring 8
Piling Anchoring 11
Deadweight Anchoring 15
StiffArm Anchoring 19
5 Gangways 22
Float Hinge Kit 23
Abutment Hinge Kit 23
Transition Plate. 23
Gangway Roller Kit & Roller. 23
Aluminum Gangway 24
Polyethylene Gangway. 24
Gangplank Mounting Kit 27
Polyethylene Plank. 27
6 Accessories 28
Corner Gusset 28
Utility Channel 28
Corner Storage Box 29
Large Storage Box 30
Swim Ladder 31
Float Step Ladder. 32
Bench 33
8” Nylon TieUp Cleat 34
12” Galvanized TieUp Cleat 34
Bumper. 35
Dock Edging. 35
Security Curbing. 36
Handrails 37
7 Warranty/Customer Service 38
8 Maintaining your EZ Dock 38

Dear EZ Dock Owner,

The EZ Dock team thanks you for your purchase. We know that you had other choices of docks, and we appreciate your decision to purchase EZ Dock.

You will find it easy to maintain your EZ Dock products and to add accessories and other components to your dock in the future. EZ Dock is the most durable dock on the market, and your friends and family will enjoy your dock for many years to come.

Before you install your new EZ-Dock, please take a moment to register your dock warranty. You can register online at www.ez-dock.com or by using the warranty registration card provided by your distributor/dealer. By registering your product, you will activate your product warranty and thereby protect your purchase against covered product defects. Please feel free to give your EZ Dock customer service department a call with any issues that you may have with your EZ Dock. You can reach our customer service department by dialing:

USA/Canada: 1-888-654-8168
Int'l: 1-417-235-223
Europe: +32 (0) 4 240 0353

GENERAL INFORMATION AND INSTALLATION OVERVIEW

GENERAL INFORMATION

The EZ Dock system is a uniquely simple, low-maintenance design that's versatile, safe, and durable. EZ Dock's patented one-piece, self-floating design is fast and easy to install. Sections come in several sizes with evenly spaced coupler, hardware, and anchor pockets.

Once assembled, this system is designed to minimize the amount of flex occurring from stress and loads on the system. The rubber connections will stretch to help the system, and its attachments, absorb shock and extreme pressures. Properly installed and maintained, this system will last for years of enjoyable use.

IMPORTANT! Assembly, Installation, Maintenance and Safety:

You should read these instructions thoroughly, before assembling and installing your EZ Dock. Please adhere to all recommendations and cautionary suggestions appearing in this manual and always follow the instructions precisely. Please save these instructions and refer to them as needed for future reference.

ASSEMBLY OVERVIEW

become familiar with the installation instructions before beginning

- Although most assembly instructions depict a 40" wide dock section, the same assembly methods are used for the 60" and 80" wide docks.
- The layout should be planned before beginning to assemble the dock.
- Make sure the correct tools are available.
- The system may be assembled on the ground, on open water, or on a sufficiently thick ice sheet. To make assembly easier, attach pairs of the dock sections together, before placing in the water.

Recommendations:
Attach as much hardware to dock sections as possible, before placing the sections in the water.

Whenever possible, connections should be made at the shoreline, and the dock should be pushed out into the water.

Tools and Requirements:

As with most assembly and installation projects, some tools are required to assemble and install your EZ Dock. You may not need every tool listed below for your particular installation, but the following tools are generally helpful in the installation process (for professional installation, call your local EZ Dock dealer):

- EZ Dock in-water installation tool (900010)
- 1/2" drive ratchet
- Socket set (especially 1/2", 9/16", 5/8", 11/16", 15/16", sq. HD or 19 mm—12 pt)
- Open-end, boxed-end wrench set (above mentioned sizes)
- Screwdrivers (Phillips and standard)
- Pliers
- Adjustable wrenches
- Hammer
- Level
- Pipe Wrench (if using augers)
- Pry-bar (small and large)
- Rope (at least 3/8" braided nylon)
- Power drill & bits
- Power or Hand Saw
- Utility knife
- One bar of ordinary hand soap

EZ Dock Specifications

204010 (B)
40” X 10’ Dock Section
Length: 10’ (3.1 m)
Width: 40” (1 m)
Height: 15” (38 cm)
Weight: 190 lbs. (86.2 kg)
Floatation Capacity: 2000 lbs. (907.2 kg)

204060 (A)
40” X 60” Dock Section
Length: 60” (1.4m)
Width: 40” (1m)
Height 15” (38 cm)
Weight: 100 lbs. (45.4 kg)
Flotation Capacity: 1,000 lbs. (453.6 kg)

206010 (C)
60” X 10’ Dock Section
Length: 10’ (3.1 m)
Width: 60” (1.5 m)
Height: 15” (38 cm)
Weight: 285 lbs. (129.3 kg)
Floatation Capacity: 3000 lbs. (1360.8 kg)

260120 (E)
Half Hex Dock Section
Length: 10’ (3.1 m)
Width: 60” (1.5m)
Height: 15” (38 cm)
Weight: 210 lbs. (95.3 kg)
Flotation Capacity: (2,000 lbs. (907.2kg)

208010 (D)
80” X 10’ Dock Section
Length: 10’ (3.1 m)
Width: 80” (2 m)
Height: 15” (38 cm)
Weight: 375 lbs. (175 kg)
Floatation Capacity: 4000 lbs. (1814.4 kg)

300501 (F)
Corner Gusset
Length: 46-5/8” (1.17 m)
Width: 33-1/2” (.84 m)
Height: 6” (15 cm)
Weight: 40 lbs. (18 kg)
Flotation Capacity: N/A

Because of the rotational molding process, weights and dimensions may vary.

Model/Serial Number

You should register your EZ Dock product to ensure proper warranty coverage. The location of the serial number may be difficult or impossible to see once installed, so we suggest that you create a record of your serial numbers and corresponding dock sections to insure proper identification when filing a warranty claim. The serial numbers can be found on the vertical side wall on the logo end of the dock sections. See photo below.

Site Preparation

Each EZ Dock installation is site specific and needs to be configured specifically for the end user's intended application. Some factors to take into consideration when determining the components necessary for a proper installation include; intended usage, water conditions, soil and bed conditions, and climatic conditions. Listed below are simple rules to follow.

Be certain that your installation configuration is designed to accommodate the daily intended use of your EZ Dock. Please take into account the following:

- Commercial application needs
- Public access requirements (ADA, CORP, or other)
- Private docking needs
- Scale of operation and use (size of boats, number of PWCs, number of people, etc.)
- Other special considerations affecting your daily use

Be aware of the unique characteristics of the specific body of water and consider how such conditions will affect the installation. Take into account:

- Overall area of the body of water
- Water depth (at the shore and at the furthest point of the dock from shore)
- Normal and greatest wave action
- Water level fluctuation
- Fresh, brackish, or salt-water
- Normal and extraordinary ice thickness and movement
- Lake bed and soil conditions (sand, rock, mud, etc.)
- Determine whether your installation will be attended to and inspected on a regular basis.
- Become acquainted with the normal movement associated with floating structures.
- Determine whether you are capable of performing your own installation or whether it is best to hire a professional.

Sites with severe wave conditions need to arrange docks so pylons are parallel to wave action and vent holes are facing inside to minimize excess water collecting in docks.

Once you have considered and worked out the issues above, the next step is to select the anchoring method that is best for you. Since no two installations are ever exactly the same, each and every EZ Dock installation must be designed and configured for the specific and intended application.

Dock Placement in Relationship to Shore

After the prevailing wind and wave directions have been established it will be necessary to design the dock system so that the dock length is parallel to such direction. This will allow the EZ Dock patented couplers to flex properly. Refer to the diagram to the right for further details.

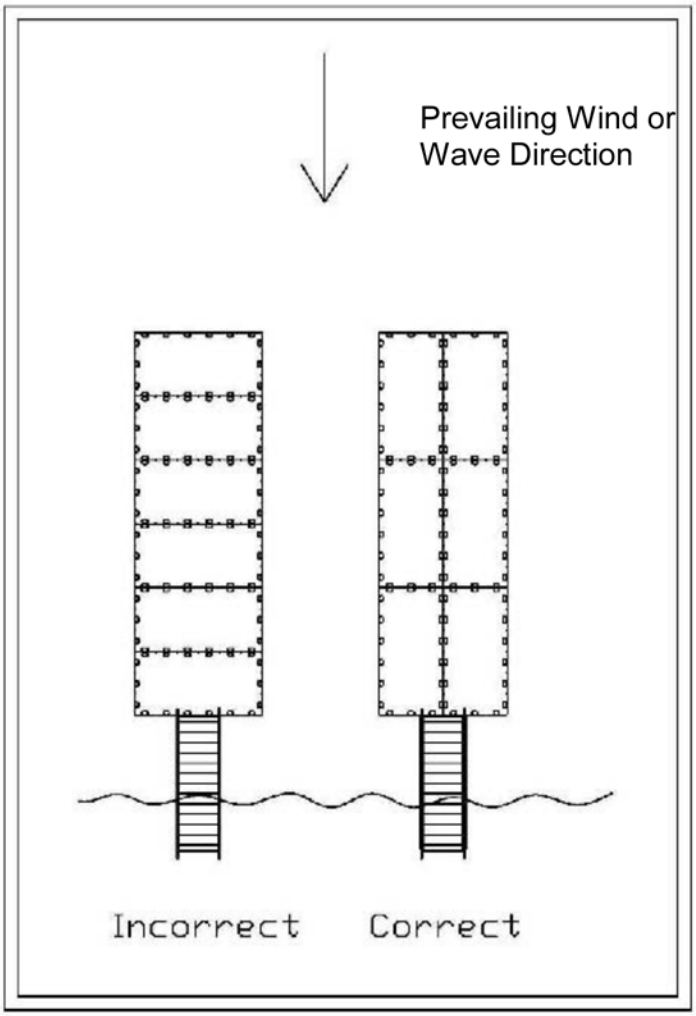

Coupler Installation (301100)

Helpful Hint: To make assembly and disassembling easier, rub a bar of hand soap on the coupler rods to lubricate them.

1. Insert the composite coupler bolt into coupler. Align the mark on the head of the bolt so the splines line up into the notched pockets in the coupler.
2. Using a hammer, seat the bolt into the coupler.
3. Install coupler with seated bolt on the in-water installation tool.
4. Align dock sections so coupler pockets are adjacent to each other, and using the in-water installation tool, insert the coupler and bolt assembly into the bottom pocket with the bolt pointing upward.

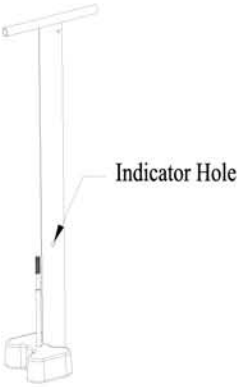

5. Pull up on the in-water installation tool to seat the bottom coupler. (NOTE: The dock sections must be setting level on the water and at the same elevation for the coupler to properly seat into the bottom pocket. Sometimes it is helpful to ballast the opposing ends of dock sections to keep the adjoining ends from dipping. This can be done by having someone stand on the opposite ends of each dock section, or by standing on an elevated beam or board (as shown) placed perpendicular to the dock section to span the seam being connected. When coupling seams together, it is recommended to start at the center of the seam and work to the edges.

DO NOT OVER TIGHTEN THE NUT!
Torque to 15 ft lbs.

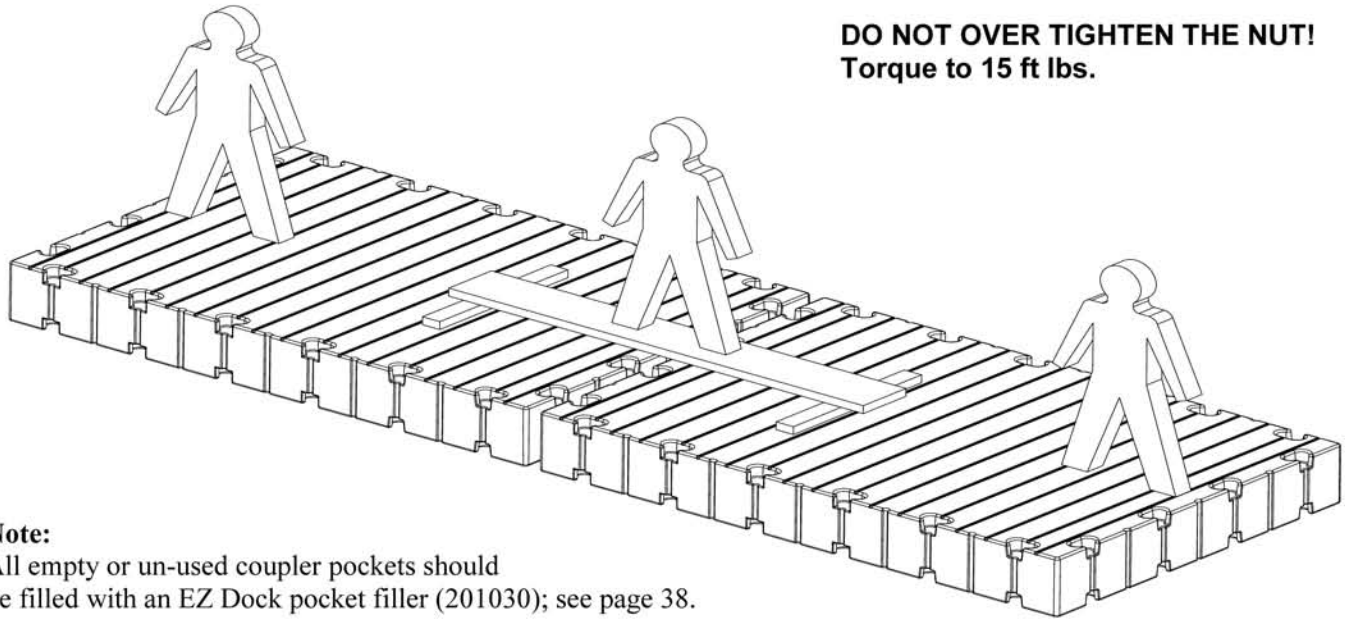

Note:
All empty or un-used coupler pockets should be filled with an EZ Dock pocket filler (201030); see page 38.

⚠ DANGER

Drowning Hazard

Swimming under and/or attempting to breathe in cavities under EZ Dock docks and ports while performing in-water installation of docks, ports and couplers can result in accidental drowning and death.

Do not attempt in-water installation without EZ Dock in-water coupler installation tools.

In-Water Coupler Installation Tool (9000010)

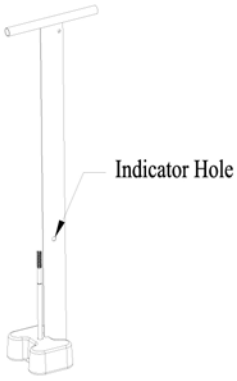

1. Align and abut the adjoining ends of the dock sections .
2. Insert the bottom coupler and bolt assembly into installation tool and firmly pull up to seat coupler.
3. Hold the top handle and lower the tool with coupler into the water until the rod is completely below the bottom surface of the dock section. (If the rod hits the dock section the coupler may fall off the tool).

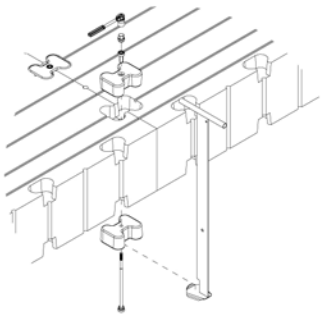

4. While maintaining the proper depth, slide the tool between the dock sections until you reach the pocket to be connected.
5. Lift the tool upward while aligning the rod to come up between the opening through the pockets. The tool has a 1/2” hole on the long flat part of the handle that may be seen above the deck area and will indicate that the bottom coupler is properly in position. Insert a rod or screwdriver into this hole to hold the tool and coupler in place while connecting top coupler.
6. Place top coupler into position, thread on coupler nut, and draw the connections together tightly.
7. To release the installation tool, remove pin from hole and push down tool, sliding it between the docks and begin your next coupler installation.

For help contact your dealer or distributor at 800-654-8168.

Anchoring

Once you have selected your site and assembled the dock , the next step is to select the anchoring method best suited for your location. Since no two installations are ever exactly the same, each and every EZ Dock installation must be designed and configured for your specific application. Your local dealer can help you select the anchoring system that is right for your location. EZ Dock offers a wide variety of anchoring components which are simple to install and safe to use. Constructed of either poly-ethylene or steel (both of which are long lasting, durable materials that can range from light to heavy duty) they both provide a wide range of reliable options to construct a dock for nearly any use and wa-terscape.

Selecting your Anchoring Method

EZ Dock provides a wide range of anchoring components to accommodate most water conditions and bottoms (deep, shallow, rough, or sandy). EZ Dock anchoring methods are simple to install and safe to use. Our anchoring products are made from long-lasting, durable materials that can accommodate from standard to heavy-duty demands.

- Pipe anchoring is typically used in most private and some light duty commercial applications.
- The deadweight method of anchoring is used with deeper water or rocky bottoms.
- Piling anchoring is very similar to pipe anchoring in that the pilings are used to prevent the lateral movement of the dock. This method of anchoring is used in heavy duty commercial applications.
- Stiff-arm anchoring is a method of supporting the dock system by attachment to the shore or some other type of rigid structure by poles or arms.

Pipe Anchoring

Pipe anchoring is our most popular type of anchoring using a small diameter pipe to provide the horizontal support necessary to keep the docks in place. The use of pipe will allow the docks to move up and down with most water fluctuations, and with little maintenance . It includes a heavy-duty and a standard-duty pipe bracket that is typically used in most private and some light duty commercial installations. The size and number of pipe needed will be determined by conditions encountered.

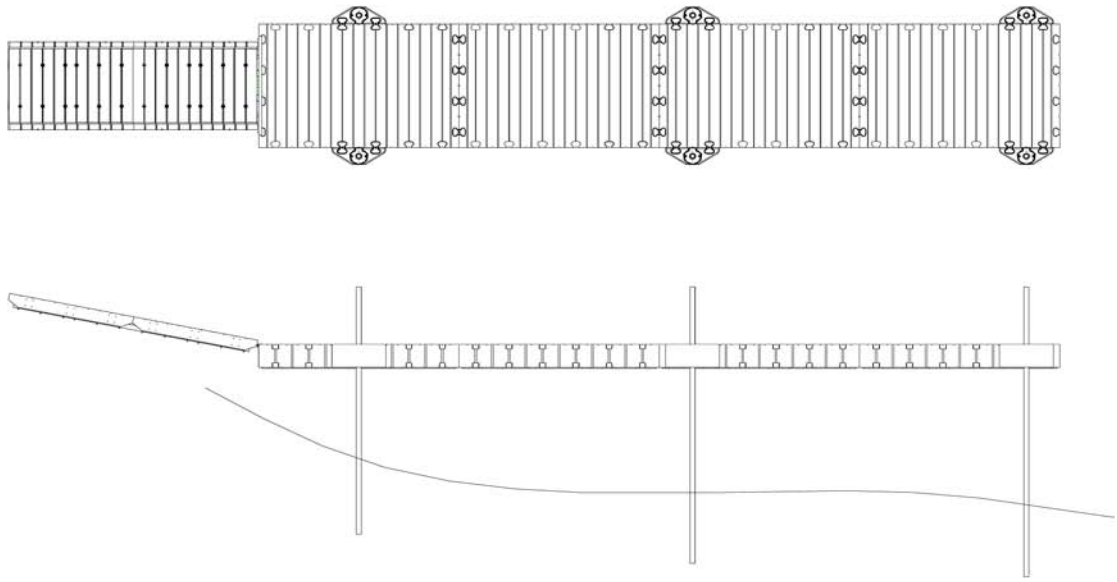

Pipe is normally embedded or screwed into the bed of the body of water a distance of three to eight feet (roughly 1/4 to 1/3 the total length of the pipe). Wave action should not exceed three feet, and water depths should not exceed 12 feet for the 2-1/2” bracket or 18 feet for the 3” bracket.

- Pipes can be used to secure an EZ Port. When pipes are used they must be sufficiently embedded or screwed into the lake, river or ocean bed to a depth of at least three feet. The EZ Port will not hold the pipe upright, the pipe should remain vertical and hold the EZ Port in place.

- It is recommended to use pipe augers, except in rocky or shale bottoms, to make installation easier. Augers allow the pipe to be turned into the lake, river or ocean bed like a cork screw using a pipe wrench or by drilling the hole for the pipe and using a T-handle.

- Pipe diameter: Pipe brackets are available for two pipe sizes 2-1/2” and 3-1/2”. A 2” bracket is designed to use pipe that measures 2-1/2” in outside diameter and a 3” bracket is designed to use pipe that measures 3-1/2”. The installation process is the same for either pipe size.

- In salt water or brackish water conditions it is recommended that the steel pipe be sleeved with PVC pipe. The steel pipe will need to fit inside the 2-1/2” or 3-1/2” pipe. This will help prevent abrasion and wear on the pipe bracket, prevent rust, and improve appearance.

Determine the length and size of pipe needed and bracket locations.

Pipe Brackets

EZ Dock pipe brackets are available in a standard-duty or heavy-duty models. Each type of bracket is capable of using 2-1/2” or 3-1/2” pipe depending on your needs.

Standard-Duty Pipe Bracket (130250 or 130350)

The standard-duty bracket is designed for residential use or to anchor EZ Port PWC lifts. For installation wave action should not exceed 1.5 to 2 feet and water depths should not exceed 8 feet for 2” pipe or 12 feet for 3” pipe. The standard-duty bracket is simple to install, connecting to a single set of pockets that may be placed anywhere around the perimeter of the dock. It is always best to locate at least one bracket near the shore end of the dock. The other brackets may be placed along the sides or at the ends of the dock.

Heavy-Duty Pipe Bracket (210250 or 210350)

The heavy-duty pipe bracket is designed for residential and light commercial applications which must allow docks to adjust to changing water levels. Wave action should not exceed 2.5 to 3 feet. Water depths should not exceed 12 feet for 2” pipe or 18 feet for 3” pipe. It is always best to locate at least one bracket near the shore end of the dock. The remaining brackets may be placed along the sides or at the end of the dock. You never want to span a seam restricting the movement of the dock creating more stress on the couplers. Two sets of pockets are required to connect the bracket to the dock.

Pipe Auger (100255 or 100355)

The auger is attached to the bottom of the pipe to allow easier installation of pipe anchoring in lake, river, or ocean bottoms. The auger works well in sandy or muddy bottoms.

Anchoring Pipe Specifications

For part numbers ending with ...025, component will be 2.5” OD 10 gauge, galvanized pipe.

For part numbers ending with ...035, component will be 3.5” OD 8 gauge, galvanized pipe.

Standard-Duty Pipe Bracket Installation

Tools Required:

Ratchet
5/16” socket
5/16” wrench

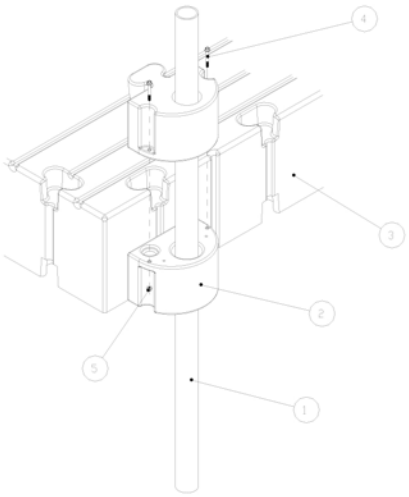

1. Slide the polyethylene bracket halves over the top of the pipe as shown. The two halves of the bracket are identical.
2. Align the pipe next to the dock where it is to be attached. The pipe should be placed so that it is centered with a pocket.
3. Install the bottom half of the bracket by inserting the molded on coupler into the bottom pocket of the dock or lift.
4. Attach the top half of the bracket by inserting the molded on coupler into the top pocket of the dock or lift.
5. Secure the two halves together using the supplied 5/16” bolts and nuts.

Heavy-Duty Pipe Bracket Installation

Tools Required:

Ratchet
5/16” Socket
Hammer

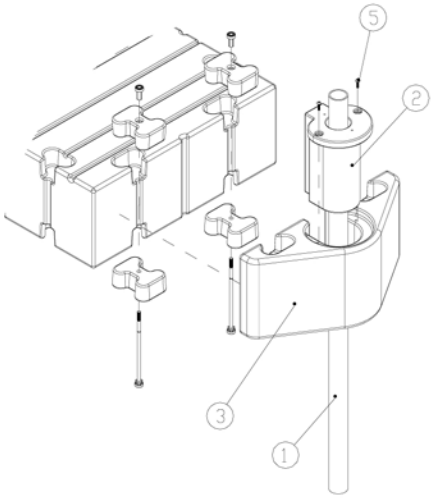

1. Slide the insert over the top of the pipe to be installed.
2. Align the pipe next to the dock where it will be attached. It should be placed so that the sleeve is centered between two pockets. Auger or drive the pipe into the bottom until it will stand by itself, but still can easily be adjusted for proper positioning.
3. Slide the sleeve inserts up the pipe far enough so that the main frame can be brought around the pipe and into position against the dock.
4 Attach the polyethylene main frame to the dock using a standard coupler set. Refer to coupler installation instructions.
5. Slide the insert sleeve down the pipe and into the polyethylene main frame, adjusting pipe location if necessary. Secure the insert sleeve with the two 5/16” (80514SS).
6. Finish driving or screwing the pipe into the bottom so that it is solidly in place, the minimum depth of the pipe is three feet.

ITEM	QTY.	PART NO.	DESCRIPTION
4	2	80514SS	BOLT 5/16-18 X 1 1/4 TRUSS HD 18-8 SS
3	1	10015	HEAVY DUTY PIPE BRACKET
2	1	10004	3 1/2" I.D. POLYETHYLENE INSERT
1	1		3 1/2" SCHEDULE 40 GALVANIZED PIPE

BILL OF MATERIAL

Anchoring Pipe and Auger Installation

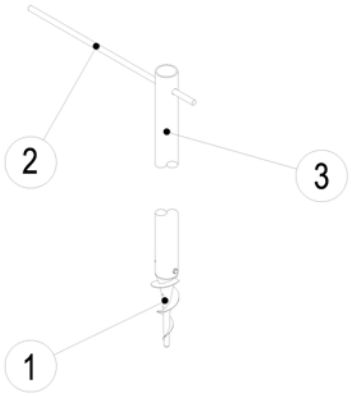

Tools Required:

- Drill
- Drill Bit
- Ratchet
- 3/4” or 19 mm socket
- 3/4” or 19 mm wrench
- Pipe Wrench (optional)

1. Determine the length and size of pipe needed.
2. Insert auger butt into the end of the pipe and drill a 3/8” hole through the pipe and auger at the same time.
3. Insert bolt that is provided through the hole and tighten with the lock nut that is provided.

ITEM	QTY.	PART NO.	DESCRIPTION
1	1	100355	KIT AUGER FOR 3 1/2 PIPE
2	2		T HANDLE
3	2		3" SCHEDULE 40 GALVANIZED PIPE

NOTES

Piling Anchoring

The heavy duty piling bracket is recommended for deep water levels or severe conditions such as heavy wave or wind action or when a large craft are to be moored to the dock system. The piling needs to be driven a minimum of 3' into the bed when you have moderate water going deeper with rougher water. Some of the harsh environments where the use of pilings should be considered are shown below.

- Where vessels of thirty feet or longer are to be moored.
- Where the water depth is greater than 18 feet.
- Where there are extreme winds and/or currents to contend with.
- When large water fluctuations are present.
- Where severe ice conditions are present and would cause the smaller pipe to bend and/or be jacked out.

Pilings typically range from six to twenty-four inches in diameter and are driven into body of water from seven to forty feet.

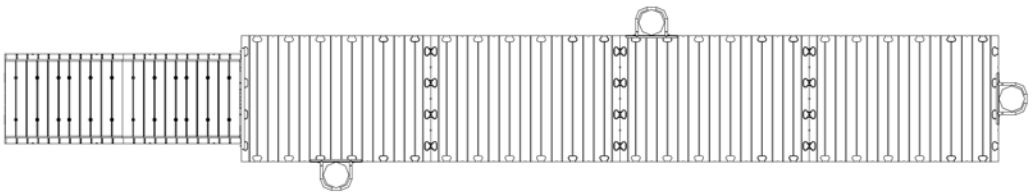

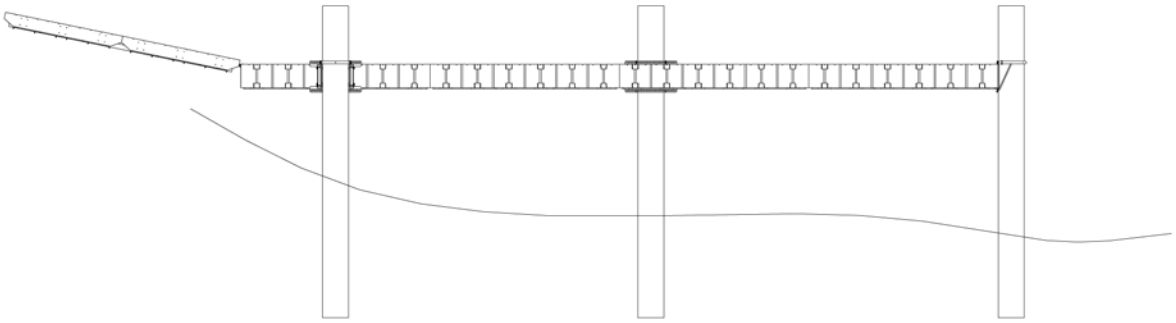

Piling Brackets

The piling brackets is available in two models, a standard-duty and heavy-duty. Both brackets are designed for variable adjustment to attach to existing piles.

Standard-Duty Piling Bracket (100800)
Piling Hoop (100804, 100806, 100808, 100812, 100816, 100820, & 100824)

The standard-duty piling bracket is designed for deep water installations, more severe conditions such as heavy wave or wind action, or when larger vessels will be moored to the dock system. The standard-duty piling bracket can be adjusted to accommodate existing pilings . We have several hoop sizes to accommodate any piling you may have. Be certain there is sufficient clearance between the hoop and piling so the dock can move freely with water level changes.

Heavy-Duty Piling Bracket (300800)

The heavy-duty piling bracket is recommended for deep water or severe conditions such as heavy wind or wave action or when larger craft will be moored to the dock system. The bracket has multiple coupler pockets for easier alignment to existing pilings. It can be coupled with any pocket configuration to allow the piling to center in the piling bracket. You never want to span a seam, as restricting the movement of the dock will create more stress on the couplers. Position the adjustable steel rollers in various configurations to fit pilings from 6” to 18”.

NOTES:

Standard-Duty Piling Bracket Installation

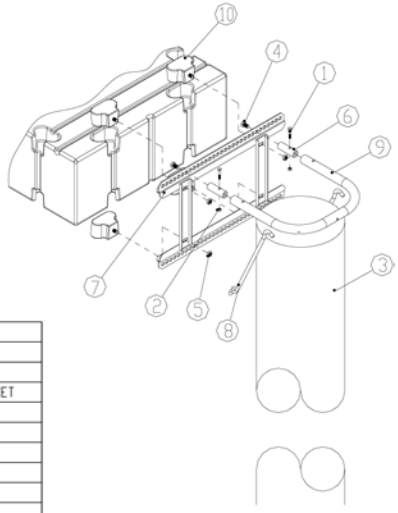

1. Loosely attach two hardware connectors to the bottom of the adjustable piling bracket.
2. Place two hardware connectors into the top pockets of the dock section where the piling bracket is to be installed.
3. Next guide the bracket and previously installed bottom hardware connectors (tapered side up) so that the bottom connectors are brought up and fully seated into the bottom pockets.
4. Move the bracket in towards the dock so the top two hardware connectors align with the mount holes in the bracket.
5. Secure the bracket to the dock by fully threading the enclosed 5/8" lock nuts. Install piling, and if using existing piling, make sure that the hoop can go around piling and mount into hoop mount holes on each side.

ITEM	QTY.	PART NO.	DESCRIPTION
10	4	S21140SS	CONNECTOR HARDWARE W/SS
9	1	S10816	EZ DOCK 16" ID PILING HOOP
8	2	S10803	EZ DOCK 21" BRACE FOR
7	1	S10801	EZ DOCK HEAVY DUTY PILING BRACKET
6	2	S10800	EZ DOCK PILING BRACKET
5	4	80580SS	
4	2	80058	BOLT 5/8-11 X 1 HHCS GRD 5
3	1		16 INCH PILING
2	2		3/8-16 NUT
1	2		3/8-16X2 BOLT

BILL OF MATERIAL

Hoop Assembly Installation

1. Place hoop insert into the hole at the end of the hoop.
2. Insert 3/8"-16 X 2" hex bolt through top of hoop and hoop insert. Secure with 3/8"-16 hex nut.
3. Insert the hooked end of the hoop brace into the pre-drilled hole in the bottom of the hoop.
4. Rotate the brace clockwise until it fits snugly inside the hoop.
5. Center hoop assembly around the pile and insert ends of the hoop brace into the corresponding holes on the bottom of the piling bracket.
6. Apply pressure while pulling the hoop up and towards the dock until the ends of the hoop are flush with the top of the bracket.
7. Insert 5/8"-11 X 1" hex cap screws through the top holes of the bracket and into the

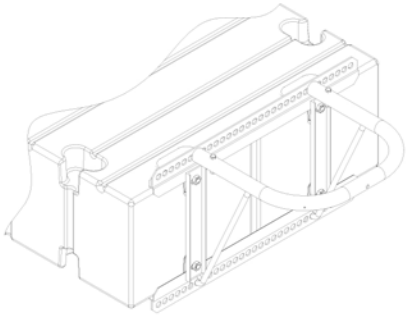

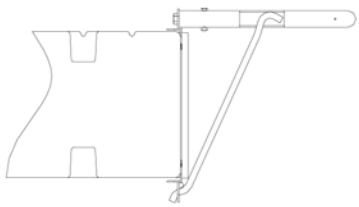

Heavy Duty Piling Bracket Installation

The heavy-duty piling bracket can be coupled with any pocket configuration to allow the piling to center in the piling bracket. You never want to span a seam, as restricting the movement of the dock will create more stress on the couplers.

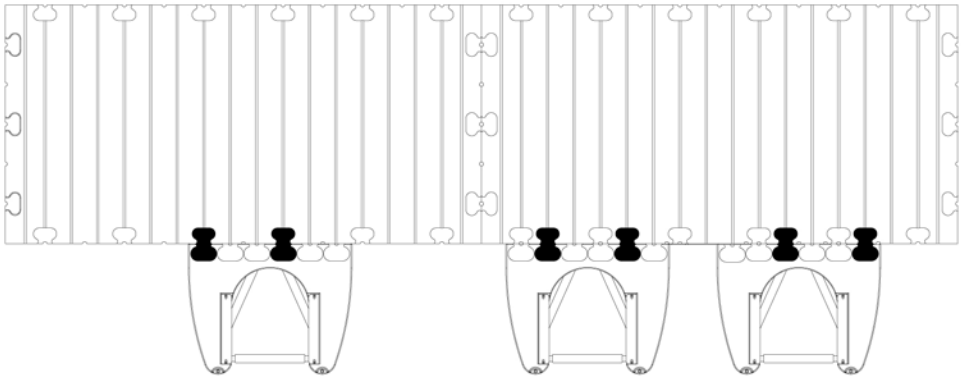

1. Place the two bottom roller assemblies into the bottom in either the forward or backward position. For pilings up to 12” diameter or smaller, use the forward position. For pilings larger than 12” use the rear roller position. 2.
2. Place the top half of the piling bracket on top of the lower half as shown and bolt them together using the 5/16” X 3-1/2” bolts (80535SS) and nuts (80095-15).
3. Attach the piling bracket to the dock in the desired pocket location and secure using two standard coupler sets.
4. After you have the piling bracket around the dock and centered, place the remaining roller assembly into one of the top roller cradles. It is important to leave 1” to 1-1/2” clearance between the rollers and piling so that the dock may move freely with changing water level.
5. Place the roller covers over the roller cradles on the top bracket and secure using four 5/16” X 1-1/2” truss head bolts (805755SS).

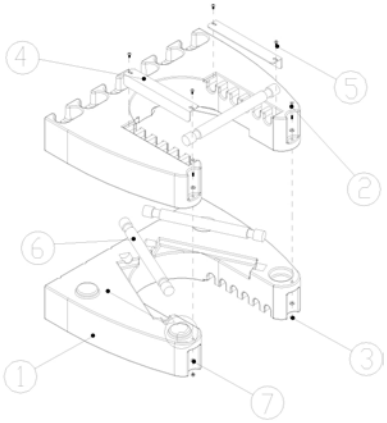

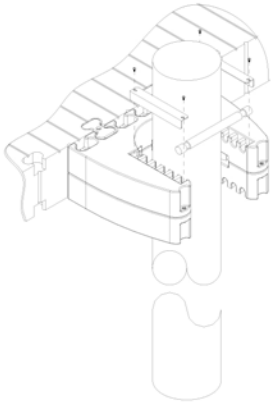

ITEM	QTY.	PART NO.	DESCRIPTION
7	4	117003	5/16 FLAT WASHER
6	3	S20801SS	ROLLER ASSEMBLY
5	4	805755SS	5/16-18 X 3/4 TRUSS HEAD BOLT
4	2	S221875	18-3/8 SS ANGLE
3	2	80095-15	5/16-18 NYLOCK HEX NUT
2	2	80535SS	5/16-18 X 3-1/2 HEX HEAD BOLT SS
1	2	S20800	ADJUSTABLE PILING BRACKET

BILL OF MATERIAL

Deadweight Anchoring

Deadweight anchoring is a method of supporting the dock system by placing a large weight on the bed of the body of water. Then it is attached to the dock by means of chain, cable, or synthetic line. This large weight serves to hold the docks in place where, due to ice, deep water, poor piling conditions, or aesthetics, pipe doesn't work. Anchoring docks by deadweights is more difficult to design and install. When determining the number and placement of the deadweights, there are no set rules or formulas. These systems will require adjusting as water levels fluctuate. It is very important that the customer understands what needs to be done to maintain the system.

EZ Dock offer 4 types of deadweight anchoring brackets to consider when ordering components. Deadweight anchoring requires equal pairs of weights to keep resistance the same on both sides. The heavy-duty pipe bracket has two options. If the water fluctuates on a regular basis, you may want to use the deadweight winch insert. If your dock system is located in a protected area, our standard-duty deadweight bracket may be sufficient.

Installing deadweight anchoring will require the use of a heavy duty pipe bracket (210350) with a deadweight (100725P) or winch insert (100730), a mid-weight bracket (100700), or a standard duty deadweight bracket (100740 or 100740SS). When possible chain should be the primarily choice for all dead weight installations. In waters that fluctuate frequently the use of a "tawining" weight may be necessary. Tawning weights are smaller weights (50-200 lbs) placed 2/3 the distance of the maximum water fluctuation from the primary deadweight. This will allow tension on the chain at lower tide levels. As a general rule deadweight will need to placed in opposing pairs at a 30° angle from the dock and the chain length should be roughly 3-4 times the water depth away from the dock.

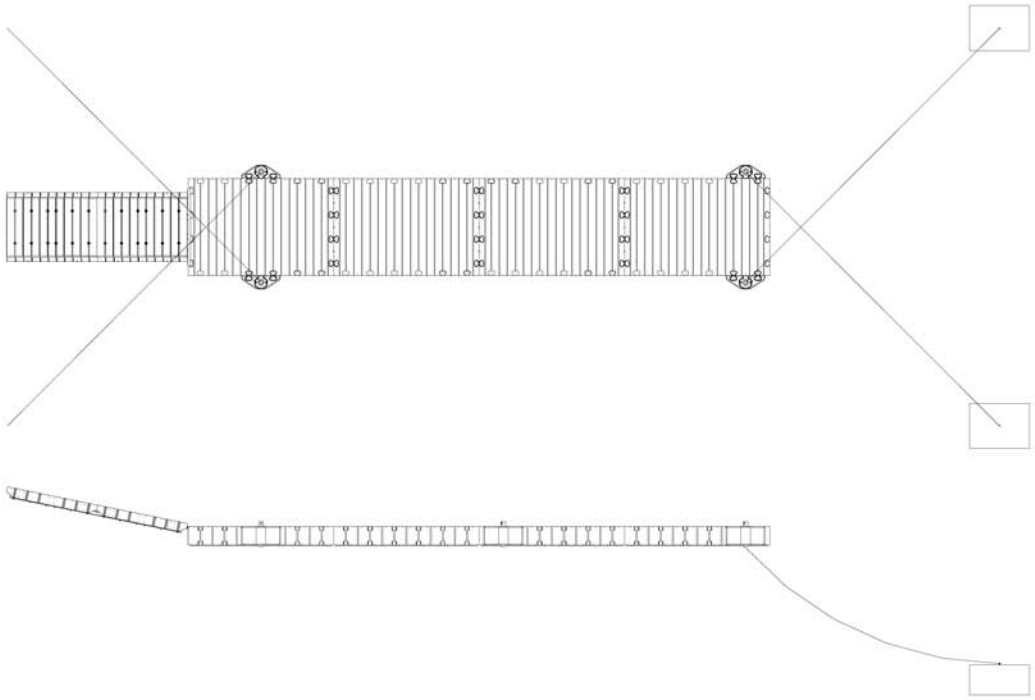

Deadweight Brackets

There are three brackets ranging from light duty to heavy duty that work well for deadweight anchoring your EZ Dock. The heavy duty bracket will allow you to use a chain insert or a winch to quickly and easily adjust your dock to frequently changing with water level.

Standard-Duty Bracket (100740 or100740SS)

The standard-duty deadweight bracket is designed for applications with water depths greater than 12 feet. Using pipe brackets work well in calm or deep water. The bracket has a key hole slot to attach your chain. Or the bracket maybe used to attach 4 X 4 railing for mooring posts.

Deadweight Bracket (100700)

When water conditions are more severe and you need more than the small deadweight, but not the larger one, this bracket is what you need. It has the same slotted features to hold the chain in place.

Heavy-Duty Bracket Deadweight 210350 /100725P or 1007300)

The deadweight is available with a deadweight insert (100725P) or a deadweight winch insert (100730) to attach deadweights to anchor EZ Dock sections. When using the winch, the cable can be easily adjusted for various water conditions. The deadweight inserts come ready to insert into an EZ Dock heavy duty polyethylene pipe bracket. The pipe bracket, insert, and cable needed for the installation are sold separately.

Standard Duty Deadweight Bracket Installation

1. Insert the hardware connector in the bottom pocket as shown.
2. Slide hooked portion of bracket into top pocket of the dock and bring bottom portion down over the hardware connector.
3. Secure bracket to hardware connector with the 5/8” lock nut:
   Fully thread nut into place
   Do not over tighten.

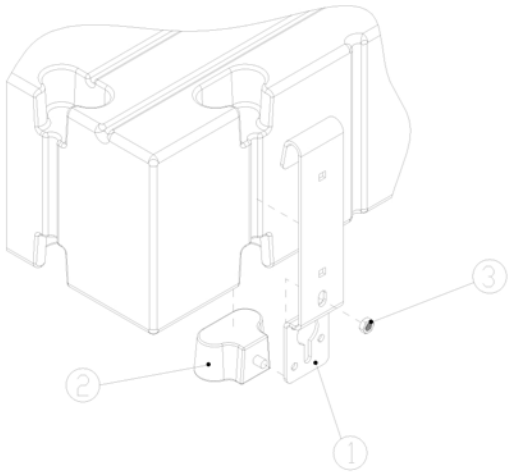

ITEM	QTY.	PART NO.	DESCRIPTION
3	1	80580SS	EZ DOCK DEADWEIGHT INSERT SLEEVE
2	1	S21140SS	HARDWARE CONNECTOR
1	1	S10740SS	5/8-11 SELF LOCKING LOCK NUT

BILL OF MATERIAL

Mid-weight Duty Deadweight Bracket Installation

1. Loosely attach two hardware connectors (tapered side up) to the inside/bottom of the deadweight bracket mainframe using the 5/8” lock nuts.
2. Place two hardware connectors into the top pockets of the dock where the deadweight bracket is to be positioned.
3. Guide the bracket so the lower hardware connectors are brought fully up into the bottom pockets.
4. Move the bracket in toward the dock so the top hardware connector bolts will protrude through the corresponding holes in the mainframe. Secure by fully threading with 5/8” lock nuts being careful not to over tighten.
5. Attach chain and weights.

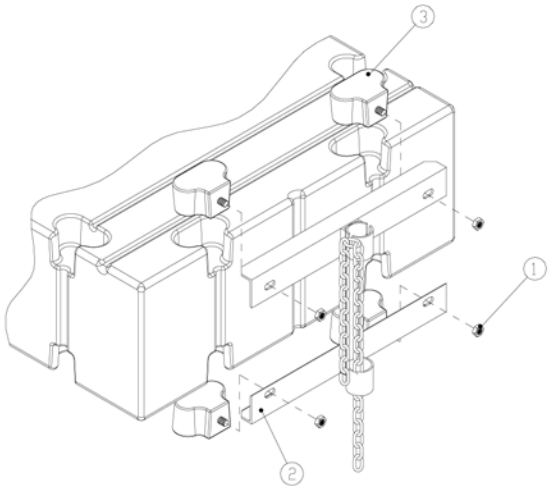

ITEM	QTY.	PART NO.	DESCRIPTION
3	1	S21140SS	CONNECTOR HARDWARE W/SS
2	4	S10701	BRACKET FRAME LARGE DEADMAN
1		80580SS	NUT 5/8-11 LOCK, SELF LOCKING 18-8 SS

BILL OF MATERIAL

Heavy Duty Deadweight Bracket Installation

The deadweight is available with a deadweight insert (100725P) or a deadweight winch insert (100730) to attach deadweights to anchor EZ Dock sections. When using the winch, the cable can be easily adjusted for various water conditions. The deadweight inserts come ready to insert into an EZ Dock heavy duty polyethylene pipe bracket. The pipe bracket, insert, and cable needed for the installation are sold separately.

Tools Required:

Hammer
15/16" Socket
Ratchet
Composite Coupler Tool
#2 Phillips Screw Driver
9/16" Open End Wrench

1. Install the heavy duty pipe bracket.
2. Slide either the deadweight insert or winch insert in the mainframe.
3. Secure the insert with two 5/16" machine bolts found in small parts bag.

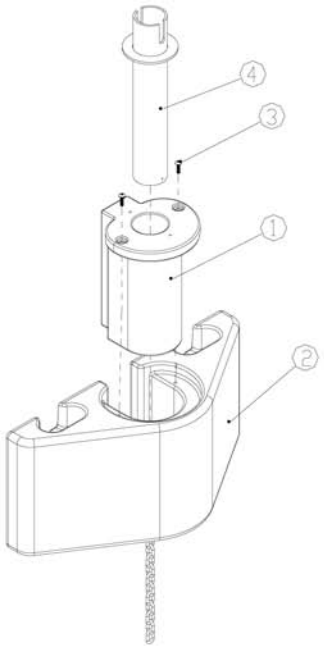

4	2	80514SS	BOLT 5/16-18 X 1 1/4 TRUSS HD 18-8 SS
3	2	100725P	EZ DOCK DEADWEIGHT INSERT SLEEVE
2	1	10015	HEAVY DUTY PIPE BRACKET
1	1	10004	3 1/2" I.D. POLYETHYLENE
ITEM	QTY.	PART NO.	DESCRIPTION
BILL OF MATERIAL			

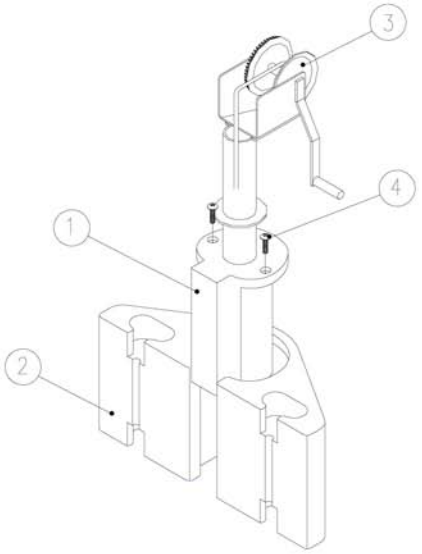

4	2	104067	3/8--16 X 1-1/4 HHCS 18-8 SS
3	2	80381	3/8" ZINC PLATED HEX NUT
2	1	92600	WINCH
1	1	S10730GV	DEADWEIGHT WINCH INSERT BRACKET
ITEM	QTY.	PART NO.	DESCRIPTION
BILL OF MATERIAL			

Stiff-Arm Anchoring

Stiff-arm anchoring is a method of supporting the dock system by attachment to the shore or some other type of rigid structure by poles or arms. These cantilever arms are attached to the rigid structure in such a way as to allow only one degree of freedom. Stiff-arm anchoring is available in a standard-duty or heavy-duty depending on water conditions. Optional shore attachments include a seawall attachment bracket for attaching to a seawall or a post/sleeve attachment for shoreline attachment. Pipe and shore attachment sold separately.

This type of support generally cannot be used in conjunction with any other type of anchoring.

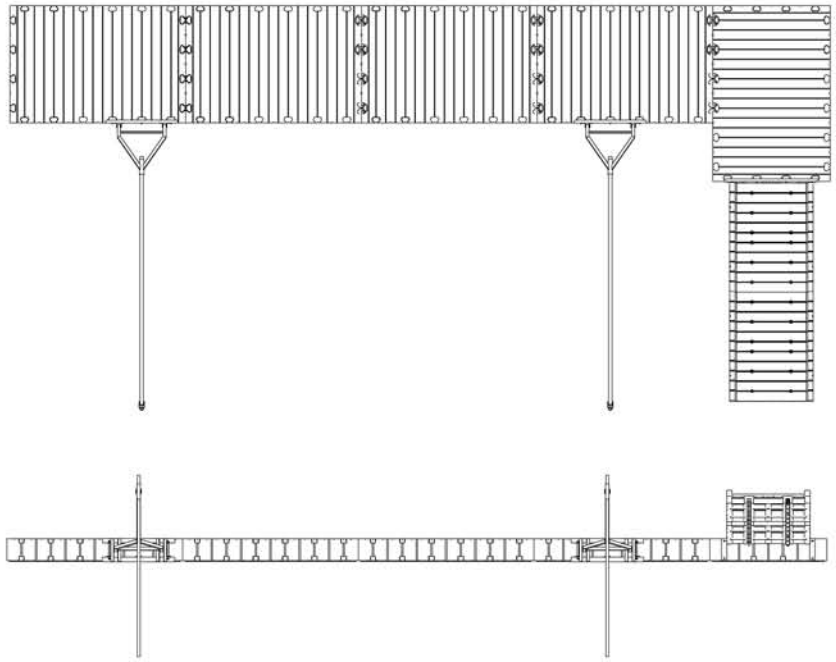

Stiff-Arm Brackets

Standard-Duty Stiff-Arm Bracket (100800)

This bracket is a combination bracket. It may be used as a stiff-arm or a dead-weight bracket. This bracket is designed to anchor to a shoreline abutment or shoreline post. The mainframe is drilled for hoops from 4" (10 cm) to 24" (61 cm) wide.

Heavy Duty Stiff-Arm Bracket (800099)

The heavy-duty stiff-arm anchors to a shoreline abutment or to a shoreline post. This bracket requires 3 pockets on your dock to attach.

Standard Duty Stiff-Arm Bracket

The standard-duty stiff-arm bracket attaches in two pockets, but covers three pockets.

1. Loosely attach two hardware connectors to the bottom of the main frame using the 5/8” lock nuts.
2. Place two hardware connectors into the top pockets of the dock section where the standard-duty stiff-arm bracket will be installed.
3. Now guide the main frame and previously installed bottom hardware connectors (tapered side up) so the bottom connectors are brought up and fully seated in to the bottom pockets.
4. Move the main frame in towards the dock aligning the top hardware connectors with the mounting holes. Secure main frame to the dock by fully threading the enclosed 5/8” lock nuts.

For concrete or bulkhead abutment application

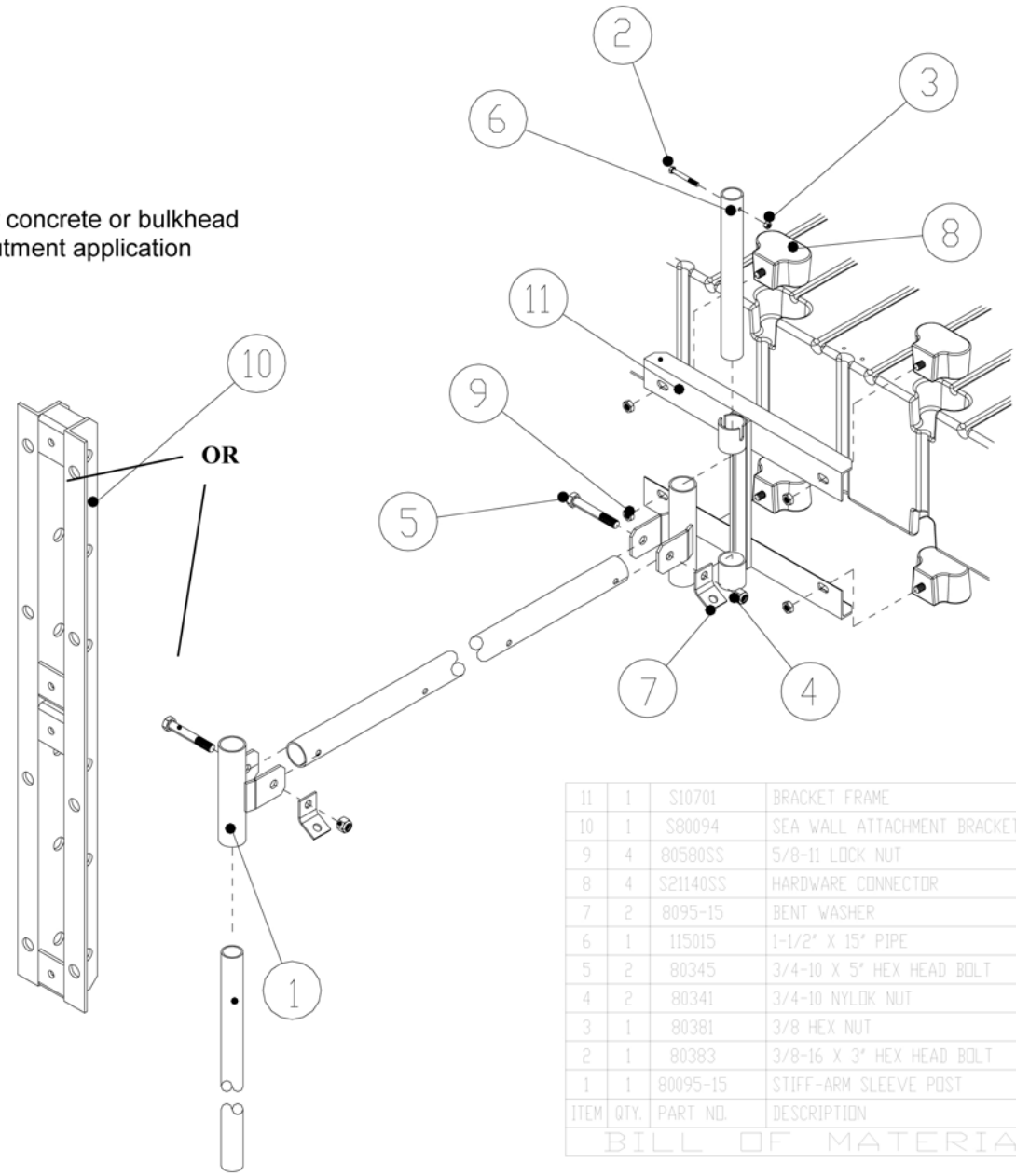

ITEM	QTY.	PART NO.	DESCRIPTION
11	1	S10701	BRACKET FRAME
10	1	S80094	SEA WALL ATTACHMENT BRACKET
9	4	80580SS	5/8-11 LOCK NUT
8	4	S21140SS	HARDWARE CONNECTOR
7	2	8095-15	BENT WASHER
6	1	115015	1-1/2" X 15" PIPE
5	2	80345	3/4-10 X 5" HEX HEAD BOLT
4	2	80341	3/4-10 NYLOK NUT
3	1	80381	3/8 HEX NUT
2	1	80383	3/8-16 X 3" HEX HEAD BOLT
1	1	80095-15	STIFF-ARM SLEEVE POST

BILL OF MATERIAL

For shoreline application

Heavy Duty Stiff-Arm Bracket (800099)

Tool Requirements:

Ratchet
5/8” Socket
Hammer

1. Loosely attach three hardware connectors to the bottom of the main frame.
2. Place three hardware connectors into top pockets of the dock section where stiff-arm bracket is to be installed. Next guide main frame and previously installed bottom hardware connectors (tapered side up) so the bottom of the connectors are brought up and fully seated into the bottom pockets.
3. Move the main frame in towards the dock so the top three hardware connectors align with the mounting holes in the top; rail of the main frame. Secure main frame to dock by fully threading the enclosed 5/8” lock nuts being careful not to over tighten.

For concrete or bulkhead abutment application

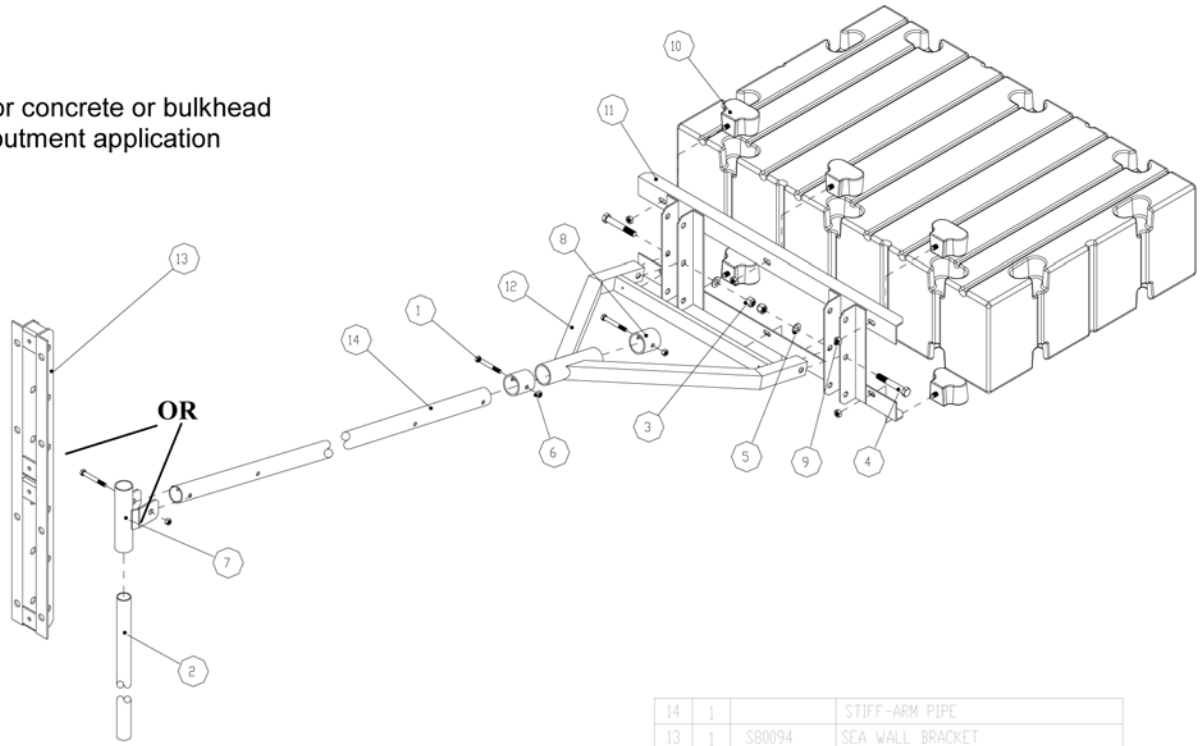

For shoreline application

ITEM	QTY.	PART NO.	DESCRIPTION
14	1		STIFF-ARM PIPE
13	1	S80094	SEA WALL BRACKET
12	1	S80091GV	YOKE
11	1	S80090GV	MAIN FRAME
10	6	S21140SS	SS HARDWARE CONNECTOR
9	6	80580SS	5/8-11 LOCK NUT
8	2	80900	PIPE STOP
7	1	80095-15	2" ID POST SLEEVE
6	3	80119YZ	1/2-13 NUT
5	2	80342	3/4 WASHER
4	2	80345	3/4-10 X 5 BOLT
3	2	80341	3/4_NYLOCK NUT
2	1		1-1/2" PIPE
1	3	80124	1/2-13 X 4 BOLT

BILL OF MATERIAL

GANGWAYS

Access is an important feature of your dock system. EZ Dock has several different options available to meet your access requirements, whether it be residential, commercial, or special needs. Gangways are hinged to adjust with changing water levels EZ Dock gangways are designed to attach to a seawall or concrete abutment using an abutment hinge assembly or a float hinge assembly to allow your dock to sit on the shore with rollers to move in and out.

Aluminum Gangway (300310, 300314, 300320, 300325, 300330, 500510, 500514, 500520, 500525, & 500530)

The aluminum gangway has welded construction with slip-resistant walkway, side curb and rail. Lengths of the gangways are from 10' to 30' and widths of 3' and 5'. As the weight of a gangway can cause the first dock section to list, it is important to select the right gangway for the application, length and width requirements with the dock configuration.

Polyethylene Gangway Section (400406)

The polyethylene gangway section is 48 inches wide to also meet special needs requirements in 6 foot length. You are able to attach three of the polyethylene gangway sections together with components designed specifically for the polyethylene gangway, allowing you to have an 18' gangway. Handrails are also available for added safety. Kits contain all of the necessary hardware to assemble to your gangway.

Wooden Gangplank Mounting Kit (100240, 100340, & 100600)

The wooden gangplank mounting kit includes galvanized steel hinge bracket, and the attaching hardware. Lengths of the gangplank vary with the kit you select. Selection of the proper width is important, as the weight of a gangplank that is too wide can cause the first dock section to list. When using the 100240, your gangplank may be 12' long. With a 100340, your gangplank may be 8' long. With a 100600, your gangplank may be 6' long. It is available in 24", 34", and 60" widths. Lengths are based on the gangplank being attached to a system containing at least three dock sections. Lumber is not included. Optional shore-end hinge brackets and roller kits are available.

Polyethylene Plank Mounting Kit (200200)

The polyethylene plank mounting kit is a hinged polyethylene panel used to create a smooth transition between shore grade and deck surface.

GANGWAY ACCESORIES

Float Hinge Assembly (100650SS or 100850SS, 400460, 400460SS, 400480, or 400480SS)

The float hinge assembly is designed to attach your gangway to the dock. Each type of gangway has a float hinge assembly. For the 3 foot aluminum gangway you will use the 100650SS. For the 5 foot you will use the 100850SS. And the polyethylene gangway uses the 400460 for attaching to a 60" dock, or the 400480 for attaching to an 80" dock. This same bracket is also used on the wooden gangplank kits: 100240, 100340, and the 100600. Installation is the same procedure for each gangway.

Shore Abutment Hinge Assembly (50501SS or 50502SS, or 400450SS)

The shore abutment hinge assembly attaches to the shoreline bulkhead with lag bolts when attaching to wood, or concrete anchors when attaching to concrete.

Transition Plate (300301, 400401, or 500501)

The hinged aluminum plate with skid-resistant surface offers a safe and sturdy transition between shore grade and gangway.

Roller Kit & Roller (300300 w/105030, 300400 w/105035, or 300350 w/105040)

EZ Dock offers an optional roller kit and roller to add to our aluminum or polyethylene gangway. The roller kit and roller protects the end of gangway by adjusting to changing water levels. Part numbers for the roller kits are 300300 for the 3' gangway, 300400 for the 5' gangway and 300350 for the 4' polyethylene gangway. Part numbers for the rollers are 105030 for the 3' gangway, 105035 for the 5' gangway and 105040 for the 4' polyethylene gangway.

Aluminum Gangway Installation

Tools Required:

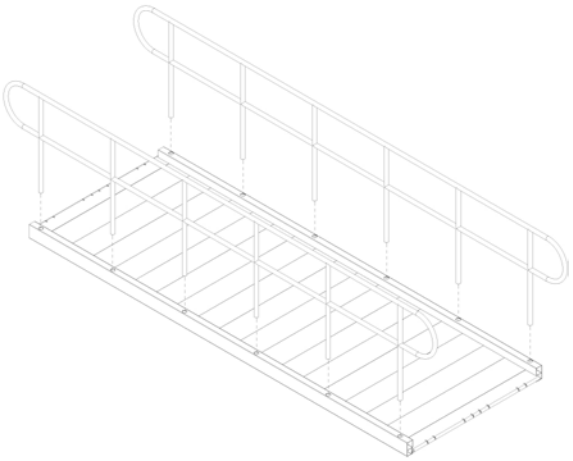

1. Attach the hinge-to-float bracket to the dock section as illustrated on page 27.
2. Insert railing legs into corresponding holes in side rail of gangway. Make certain the legs bottom-out in the holes.
3. Drill 3/16” holes through the railing legs using the guide holes.
4. Attach with 3/16” stainless steel pop rivets.

Polyethylene Gangway Connection Plate & Truss Support Installation

Tools Required:

Drill
3/8” X 7” drill bit
#2 Phillips Screw Driver
9/16” Open End Wrench or Socket

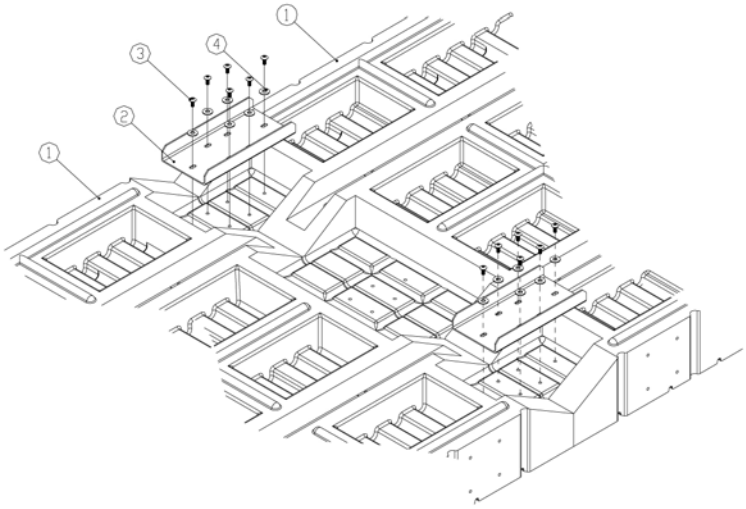

1. Lay out the gangway sections with the walking surface down.
2. Bolt the connection plates to the underside of gangway section. Use only the outer two mounting surfaces, leaving the center one empty.

ITEM	QTY.	PART NO.	DESCRIPTION
4	2		3/8" SS FLAT WASHER
3	12		5/16"-18 X 3/4" SS TRUSSHEAD BOLT
2	2	S40410SS	CONNECTION PLATE
1		400406	POLYTHYLENE GANGWAY SECTION

BILL OF MATERIAL

3. Place aluminum trusses in truss cradles. Trusses must be 5-1/2" from the outer end of the gangway.
4. Once everything is in place, drill 3/8" holes down through the trusses using the holes in the gangway section as pilot holes.
5. Insert the 3/8" X 6" SS carriage bolts in all of the holes and secure with washer and nut.

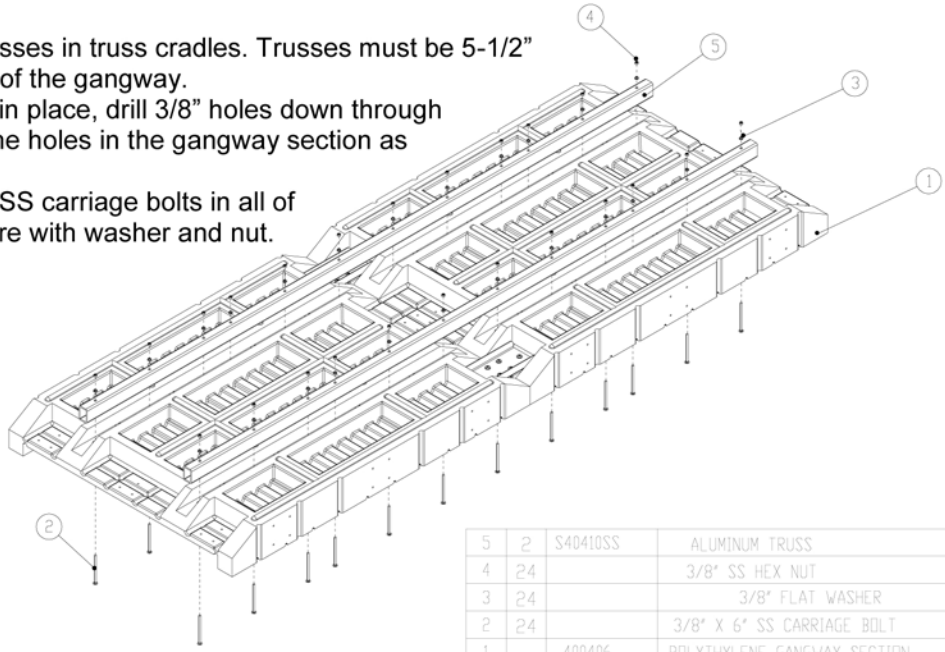

ITEM	QTY.	PART NO.	DESCRIPTION
5	2	S40410SS	ALUMINUM TRUSS
4	24		3/8" SS HEX NUT
3	24		3/8" FLAT WASHER
2	24		3/8" X 6" SS CARRIAGE BOLT
1		400406	POLYTHYLENE GANGWAY SECTION

BILL OF MATERIAL

Roller Kit Installation

Tools Required:

Ratchet
5/8" Socket

Polyethylene Gangway Roller Installation

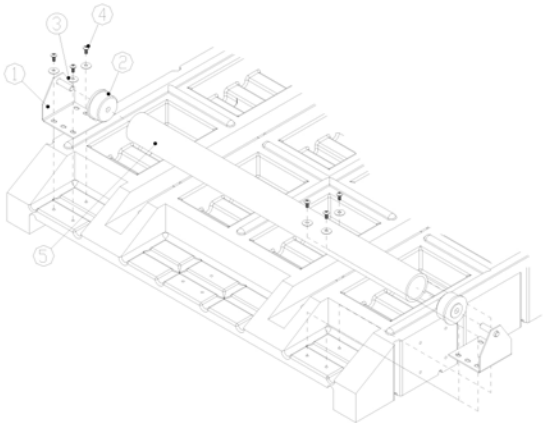

1. Align and secure one SS mounting bracket to the bottom side of the gangway using 5/16-18 X 3/4" Phillips Truss Head bolts and 3/8" ID 316 SS washer supplied in the small parts bag.
2. Align and insert the PVC roller assembly on the previously assembled bracket.
3. Hold in place and insert the other bracket in the opposite end bearing, align to the mounting holes on gangway section.
4. Mount and fully thread all bolts till tight.

Aluminum Gangway Roller Installation

1. Determine the location that will allow the gangplank to roll and pivot without scraping on the dock surface.
2. The roller should be cut to length that will position brackets 2" from outside edge of gangway.
3. Insert bracket (S30350SS) on flat area on outer edge of underneath side of the gangway.
4. When attaching brackets to the aluminum gangway use the 4 self tapping stainless steel screws on each side. Self-tapping screws are included in roller kit.

ITEM	QTY.	PART NO.	DESCRIPTION
5	1		ROLLER
4	6		3/8" ID 316 SS FLAT WASHER
3	6		5/16-18 X 3/4" PHILLIPS TRUSS HEAD BOLT
2	2	S30301DR	BEARING
1	2	S30350SS	ROLLER BRACKET

BILL OF MATERIAL

Transition Plate Installation

Tools Required:

Hammer

1. Align the sleeves of the hinge with the transition plate and slide the hinge pin through all the sleeves.
2. Secure the hinge pin with the hinge pin clip.

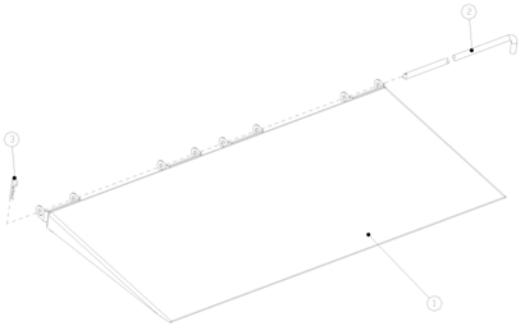

ITEM	QTY.	PART NO.	DESCRIPTION
3	1	80011	CLIP HITCH PIN
2	1	10047SS	HINGE ROD
1	1	S50501	60" TRANSITION PLATE

BILL OF MATERIAL

Bill of Material for 500501

ITEM	QTY.	PART NO.	DESCRIPTION
3	1	80011	CLIP HITCH PIN
2	1	10047SS	HINGE ROD
1	1	S30301	36" TRANSITION PLATE

BILL OF MATERIAL

Bill of Material for 300301

Float Hinge Assembly Installation

Tools Required:

Ratchet
5/8" Socket
Hammer

1. Insert the hardware connectors (S211040SS) in the top pockets of the dock.
2. Loosely attach hardware and over dock. Secure using 5/8-11 self locking nuts (8050SS). Care should be taken to not over tighten the nuts.
3. Align the sleeves of the hinge-to-plank bracket (on gangway), and hinge-to-float bracket (on dock) and slide the hinge rod (10258SS) through all the sleeves.
4. Secure rod with hinge pin (80011).

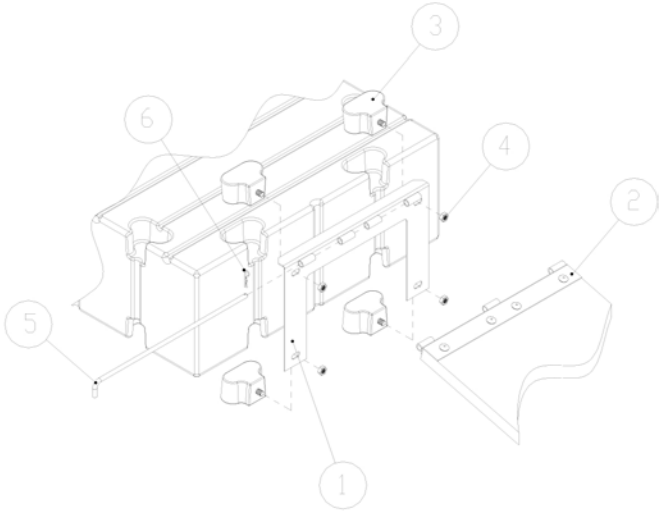

ITEM	QTY.	PART NO.	DESCRIPTION
10	4	80580	5/8-11 LOCK NUT
9	12	80012	FLAT WASHER
8	12	81212YZ	1/2-13 X 2-1/4" BOLT
7	12	80119YZ	1/2" HEX NUT
6	1	80011	HITCH CLIP PIN
5	1	S10244SS	HINGE ROD
4	4	S21140SS	HARDWARE CONNECTOR
3	2	S10243	GANG PLANK STIFFNER
2	1	S10242	HINGE TO PLANK BRACKET
1	1	S10241GV	24" HINGE TO FLOAT BRACKET

BILL OF MATERIAL

Shore Abutment Hinge Assembly Installation

Tools Required:

Hammer

1. Attach bracket to shoreline bulkhead
2. Align the sleeves of the hinge with the gangway sleeves.
3. Slide the hinge rod (10258SS) through all sleeves.

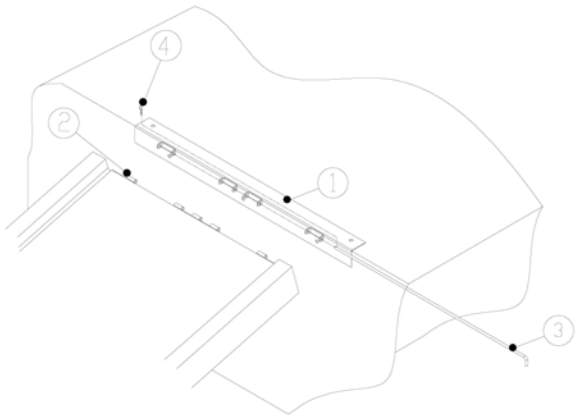

ITEM	QTY.	PART NO.	DESCRIPTION
3	1	10258SS	HINGE ROD
2	1	80011	CLIP HITCH PIN
1	1	S5051SS	48" HINGE ATTACHMENT

BILL OF MATERIAL

Bill of Material for 50501SS

ITEM	QTY.	PART NO.	DESCRIPTION
3	1	10258SS	HINGE ROD
2	1	80011	CLIP HITCH PIN
1	1	S5052SS	60" HINGE ATTACHMENT

BILL OF MATERIAL

Bill of Material for 50502SS

Wooden Gangplank or Polyethylene Plank Mounting Kit Installation

Tools Required:

Ratchet
5/8" Socket
Hammer

1. Cut all the planks to equal lengths.
2. Lay the planks side by side as they will be when assembled.
3. Place the hinge-to-plank bracket, shore– end stiffener, and middle stiffener on the planks and mark the holes for bolt locations.
4. Drill 1/2" holes through the planks at each of the locations marked in Step 3.
5. Attach the stiffeners at the shore end and at the mid-point as shown using the carriage bolts, washers, and nuts provided.
6. Attach the hinge-to-float bracket to the dock section by fully threading the 5/8" lock nuts onto the hardware connectors. Care should be taken to not over-tighten the nuts.
7. Align the sleeves of the hinge-to-plank Bracket on the gangplank and the hinge-to-float bracket on the dock side then slide the hinge pin through all the sleeves. Secure the hinge pin with the hinge pin clip.

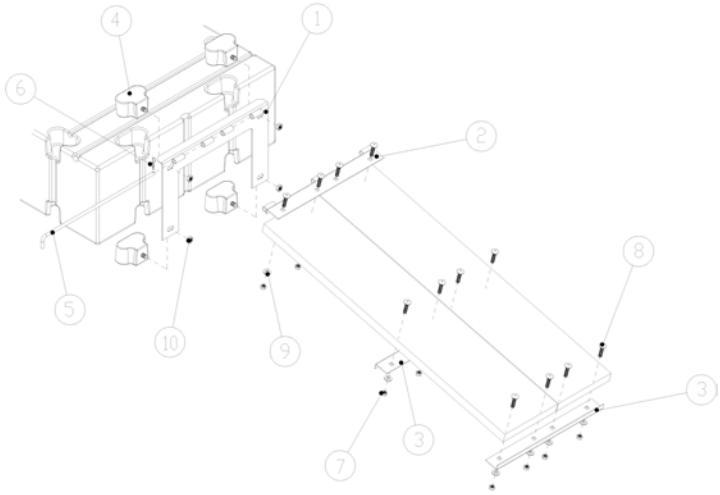

ITEM	QTY.	PART NO.	DESCRIPTION
10	4	80580	5/8-11 LOCK NUT
9	12	80012	FLAT WASHER
8	12	81212YZ	1/2-13 X 2-1/4" CARRIAGE BOLT
7	12	80119YZ	1/2" HEX NUT
6	1	80011	HITCH CLIP PIN
5	1	S10244SS	HINGE ROD
4	4	S21140SS	HARDWARE CONNECTOR
3	2	S10243	GANG PLANK STIFFNER
2	1	S10242	HINGE TO PLANK BRACKET
1	1	S10241GV	24" HINGE TO FLOAT BRACKET

BILL OF MATERIAL

ACCESSORIES

EZ Dock offers a wide variety of accessories to customize your system to suit your needs perfectly. They will increase the utility of your system and like the rest of the EZ Dock components, our accessories are designed for easy installation, durability and safety.

Corner Gusset (300501)

The EZ Dock corner gusset adds deck surface and aids with additional stability. It can be used with any EZ Dock application that creates a 90 degree angle. The gusset has a side cut-out allowing use in conjunction with the utility channel.

Installation

Tools Required:

Ratchet
Composite Coupler Tool

1. Insert the corner gusset into position by aligning the molded-on couplers into their corresponding pockets on the dock sections.
2. Next reach under the dock section and insert the corner gusset bolt into position by aligning it up thru the hole in the corner gusset and seating the head on the gusset bolt into the bottom pocket.
3. Fully thread the complete nut onto the gusset bolt.

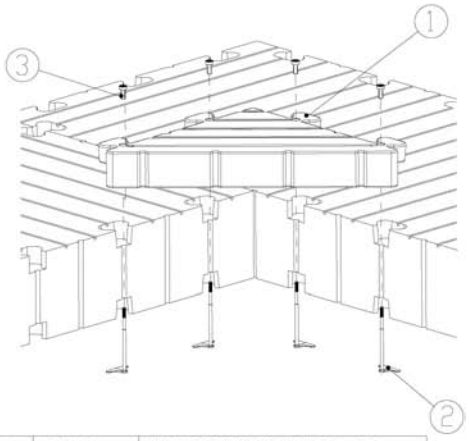

ITEM	QTY.	PART NO.	DESCRIPTION
3	4	22003	1/2-13 COMPOSITE COUPLER NUT
2	4	22005	COMPOSITE COUPLER GUSSET BOLT
1	1	S30500	CORNER GUSSET

BILL OF MATERIAL

Caution should be taken not to over tighten the EZ –Dock hardware.
We recommend tightening to 15 ft lbs.

Utility Channel (301260, 301260SS, 302060, 302060SS, 302020, 302020SS, 302030, 302030SS, 302040, & 302040SS)

Utility channel is a two-piece chase way that attaches to side of dock sections allowing conduit for utilities. It is available in two widths, 12” and 20”. The 20” utility channel has an inside or outside corner, 20” X 20”, and end caps are available.

Utility Channel Installation

Tools Required:

Ratchet
5/16" Socket
Composite Coupler Tool
Hammer

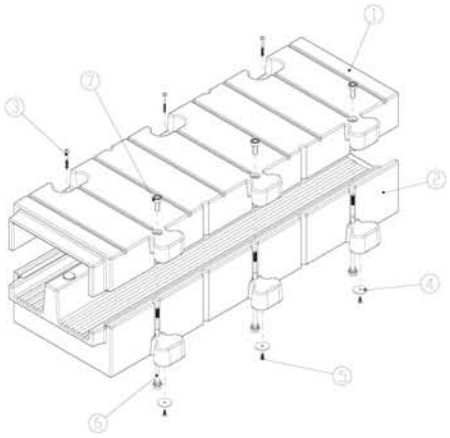

Utility channel are factory assembled.

1. Remove truss head bolts from pocket area and composite coupler nut from the coupler area. Leave the bolt and washer on bottom.
2. Lift off utility channel top and place in pockets on the side of the dock.
3. Reach under the dock section and insert composite coupler bolt into position by aligning it up thru the hole in the utility channel.
4. Thread composite coupler nut onto bolt, being careful not to over tighten.

ITEM	QTY.	PART NO.	DESCRIPTION
7	3	22003	COMPOSITE COUPLER NUT
6	3	21003	COMPOSITE COUPLER BOLT
5	3	8057555	5/16-18 X 3/4" TRUSS HEAD BOLT
4	3	8071955	5/16 X 2" FLAT WASHER
3	3	8153055	5/16-18 X 3" TRUSS HEAD BOLT
2	1	31209	12" BOTTOM UTILITY CHANNEL
1	1	31206	12" TOP UTILITY CHANNEL

BILL OF MATERIAL

Bill of Material for 301260

ITEM	QTY.	PART NO.	DESCRIPTION
7	3	22003	COMPOSITE COUPLER NUT
6	3	21003	COMPOSITE COUPLER BOLT
5	3	8057555	5/16-18 X 3/4" TRUSS HEAD BOLT
4	3	8071955	5/16 X 2" FLAT WASHER
3	3	8153055	5/16-18 X 3" TRUSS HEAD BOLT
2	1	32009	20" BOTTOM UTILITY CHANNEL
1	1	32006	20" TOP UTILITY CHANNEL

BILL OF MATERIAL

Bill of Material for 302060

Corner Storage Box (300760)

Roomy storage in a compact design that makes the most of available space without interfering with foot traffic. Utility boxes for complete utility hook-ups through this box are also available.

Installation

The EZ Dock Corner Dock Box attaches to any 90 degree turn in the dock layout using a total of 4 coupler pockets. Position the Corner Dock Box over the water and drop the molded–in half couplers located in the bottom of the dock box into the mating coupler sockets on the dock sections. Firmly push into place and attach using the 4 black composite bolts and nuts (22006 and 22003) included in the dock box. See pg. 32 for installation details.
To attach to any other dock or deck the dock box may be drilled and attached using self tapping screws and washers (not included).

For more information call 1-800-654-8168 or go to www.ez-dock.com.

ITEM NO.	QTY.	PART NUMBER	DESCRIPTION
10	4	22003	NUT COMPOSITE COUPLER NUT
9	4	22006	BOLT COMPOSITE 9.25" BOX
8	2	110047	NUT 1/4-20 HEX HEAVY NYLOK 316SS
7	1	S30763L	STORAGE BIN, LLBPK FOR S30760 LEFT
6	1	00877	EZ DOCK LOGO REFLECTIVE STICK-ON SM
4	1	S30763R	STORAGE BIN LLBPK FOR S30760 RIGHT
3	2	80560SS	BOLT, 1/4"-20 X 6" HEX HEAD 316SS
2	1	S30762	LID FOR EZ DOCK CORNER DOCK BOX
1	1	S30761	BOX BOTTOM FOR EZ DOCK CORNER DOCK BOX

BILL OF MATERIALS

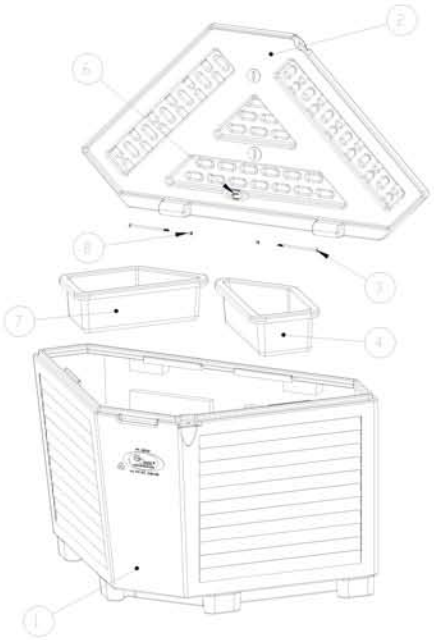

Large Storage Box (300750)

The large storage box attaches easily to an EZ Dock system or traditional dock utilizing galvanized bracket hardware. The storage box comes equipped with corrosion-free polypropylene hinges and a riveted marine steel grade hasp; for EZ locking capability. It is manufactured along with docks and other accessories giving you a perfect EZ Dock beige match.

Installation

Tools Required:

Ratchet
5/16" Socket
3/8" Socket
Phillips Screw Driver

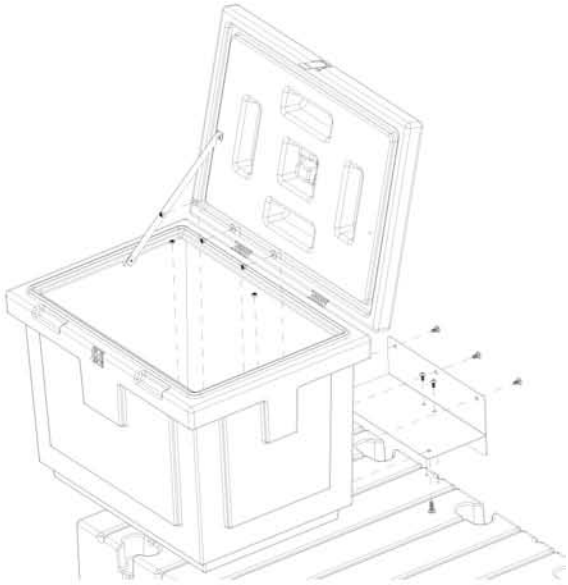

1. Attach 18" cable strap (S40037) to left side of box using embedded T-nuts.
2 Turn storage box upside down, center bracket on box and mark hole locations.
3. Drill 1/2" holes in box.
4. Insert two bolts on the outer edge of the bracket before placing on dock section. These bolts will need to be in place before attaching bracket at T-nut locations on the side of the dock. With two 5/16-18 truss head bolts (81590SS) and flat washers attach bracket to dock.
5. On the back of the bracket, slide three 3/8-16 X 3/4" carriage bolts through bracket and back of box. Place flat washers over carriage bolts and fully thread three 3/8-16 Nylok Hex nuts onto the carriage bolts.

ITEM	QTY.	PART NO.	DESCRIPTION
9	1	540637	18" CABLE STRAP
8	1	530702	EZ DOCK BOX ATTACHMENT BRACKET
7	1	530761	DOCK BOX
6	2	80590SS	5/16-18 TRUSSHEAD PMPS
5	2	80577SS	5/16-18 X 3/4 TRUSS HD BOLT 18-8 SS
4	5	117005	3/8 FLAT WASHER 18-8 SS
3	5	110030	3/8-16 NYLOK HEX NUT 18-8 SS
2	3	104064	3/8-16 X 3/4 CARRIAGE BOLT
1	2	104055	3/8-16 x 1 1/4 CARRIAGE BOLT

BILL OF MATERIAL

EZ Dock Swim Ladder

The one piece polyethylene ladder is designed for optimal safety with no exposed hardware and 400 pounds of weight capacity. Slip-resistant textured beige color surface stays cool to the touch in hot weather.

To assist with the installation of the ladder, there is a hole on the back side of the ladder. Place this hole under water and allow the ladder to fill about a quarter way full with water.

Installation

Tools Required:

Ratchet
3/8" Socket

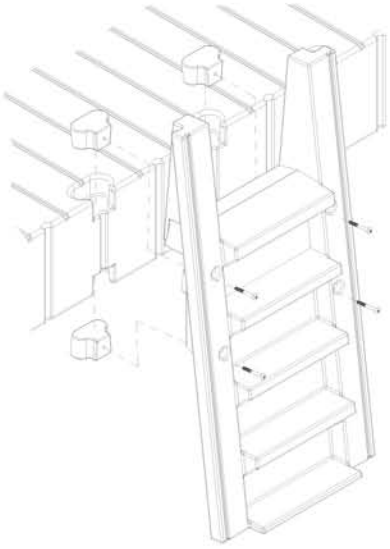

1. Loosely attach two of the polyethylene hardware connectors (R30260) to the lower two attachment points of the ladder using two 3/8-16 X 3-1/2 truss head bolts (80636SS).
2. Place the remaining two polyethylene hardware connectors in the top pockets of the dock where the ladder is attached.
3. Place the ladder into the water and bring the bottom two connectors up and into the bottom pockets of the dock.
4. With the bottom connectors fully up and into the bottom pockets, bring the top of the ladder toward the dock and into position over the top connectors. Thread two bolts through the holes in the ladder and into the top connectors.
5. Secure the ladder by fully threading the truss head bolts into both the top and bottom couplers. Care should be taken to not over tighten the bolts which could cause them to strip out the threads in the connectors.

ITEM NO.	QTY.	PART NUMBER	DESCRIPTION
3	4	80636SS	BOLT 3/8"-16 3-1/2" TRUSS 18-8 SS
2	4	R30260	LADDER CONNECTOR
1	1	30260	SWIM LADDER POLY 5 STEP

BILL OF MATERIALS

EZ Dock Float Step Ladder (300270)

The EZ Dock float ladder allows safe access to and from your dock or sea wall at any water level. The ladder remains above the water when not in use, keeping your ladder free of hazardous marine growth and electrolysis.

Installation

Tools Required:

1/2" drive Ratchet
1/2" & 5/16" Socket
1/2" & 5/16" Open End & Box End Wrench
Phillips & Standard Screwdriver
Pliers
Adjustable Wrenches
Hammer
Small & Large Pry Bar

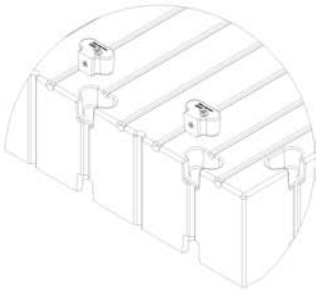

1. Decide where ladder is to be installed. Ladder requires 2 coupler pockets.
2. Drop hardware connectors into pockets, EZ Dock logo up.
3. Note: There is a left and right rail. He guide track mount is offset on the rail. The rails should be installed so the glide track mount is offset to the INSIDE. Insert bottom hook in pocket under connector and rock up into place.
4. Use 5/8-11 X 3" bolt to secure rail to dock. Tighten
5. Repeat procedure on other side.
6. Lower ladder over glides as shown.
7. Slide ladder over posts on float. Attach float to bottom of ladder using 4 5/16-18 X 3" bolts.

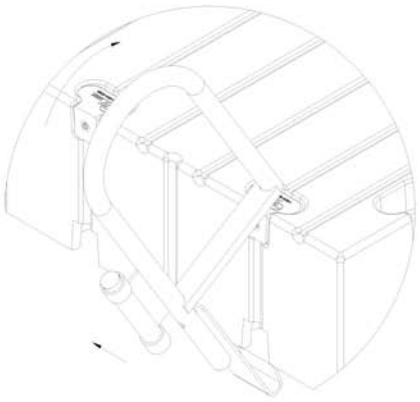

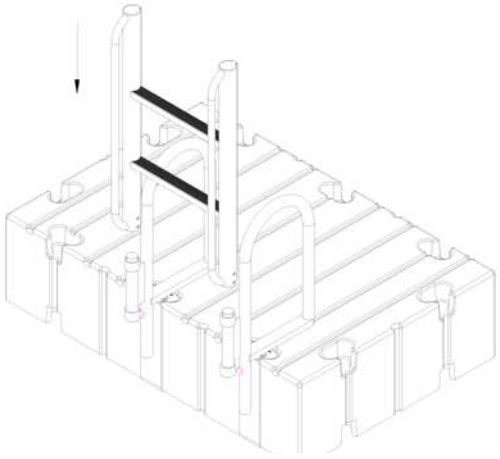

Polyethylene Bench Kit

The polyethylene bench kit is a nice addition to any dock system. It is manufactured from the same material as the docks so it matches perfectly every time. Added features include cup holders built into the arms.

Installation

Tools Required:

#2 Phillips Screwdriver
15/16" Wrench or Socket

1. Insert hardware connectors in two of the bottom dock pockets as shown.
2. Insert the RH and LH support brackets into the top dock pockets and secure with 5/8-11 self locking nut to the hardware connector. Take care not to over tighten the lock nut.
3. Both bench planks are identical and will fit on either side of the bench. Secure and fasten the poly bench planks to the bench support brackets using the hardware included in the kit.

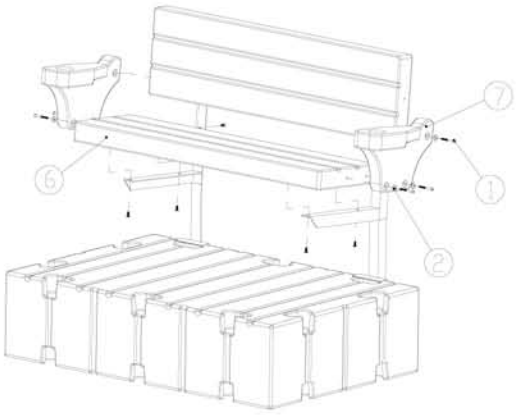

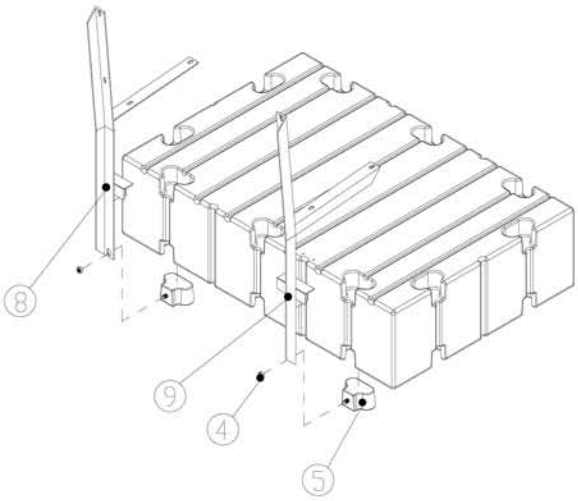

ITEM	QTY	PART NO	DESCRIPTION
9	1	538967R	PE BENCH DOCK BRACKET
8	1	538967L	EZ DOCK PE BENCH DOCK BRACKET
7	2	530966	
6	2	530965	
5	2	521140SS	CONNECTOR HARDWARE W/SS
4	2	80580SS	
3	8	80575SS	BOLT 5/16-18 X 3/4 TRUSS HD 18-8 SS
2	6	117005	WASHER 3/8 FLAT 18-8 SS
1	6		BOLT 5/16-18 X 2-3/4

BILL OF MATERIAL

4. If installing the optional arm rests, it will be necessary to leave bolts finger tight to insure proper alignment of the arm rest. Mount arm rests to the end of the bench assembly. Both arm rests are identical and will fit either side of the bench. Secure and fasten with the hardware included in the kit. Insure the bench plank bolts are tightened after installation of arms.

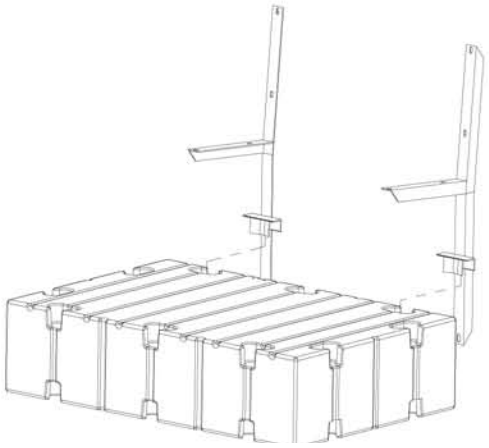

8” Nylon Tie-Up Cleat

To add to your personal touch and accommodate your personal needs, you may add a 8” tie-up cleat to tie up smaller boats. The 8” tie-up cleat attaches easily to the heavy duty stainless steel T-nuts molded in pairs around dock section perimeters.

8” Tie-Up Cleat Installation

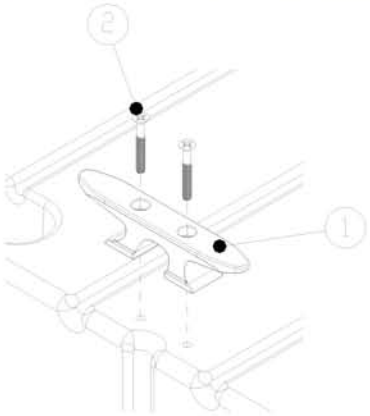

Tools Required:

Phillips Screwdriver

1. Clean out any grit or debris that might have gotten into the stainless-steel inserts in the dock.

2. Secure each cleat using two (80525SS)15/16-18 X 2-1/2” Phillips head machine bolts included in the kit.

ITEM	QTY.	PART NO.	DESCRIPTION
2	2	80525SS	5/16-18 X 2-1/4" FLATHEAD BOLT
1	1	30101	8" TIE-UP CLEAT

BILL OF MATERIAL

12” Galvanized Tie-Up Cleat 300112
10” Aluminum Tie-Up Cleat 300110

The 12” galvanized tie-up cleat attaches in a pocket on the side of the dock using a hardware connector. This cleat is intended for temporary mooring of boats up to thirty feet long and has the capability of using larger rope.

Installation

Tools Required:

Ratchet
5/8” Socket
Hammer

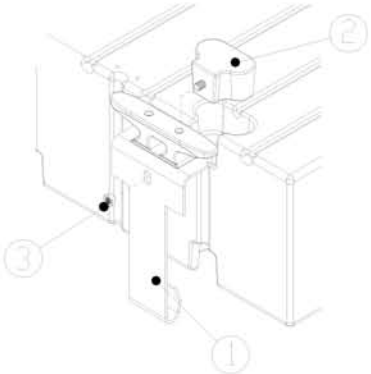

1. Slide hooked portion (S30112) of cleat into bottom pocket of the dock and bring top portion up and slide over hardware connector (S21140SS).
2. Secure bracket to hardware connector with the 5/8” lock nut (80580SS). Fully thread nut into place but do not over tighten.

ITEM	QTY.	PART NO.	DESCRIPTION
3	1	S21140SS	HARDWARE CONNECTOR
2	1	80580SS	5/8-11 SELF LOCKING NUT
1	1	S30112	12" TIE-UP CLEAT BRACKET

BILL OF MATERIAL

Bumper Kit

Secure bumper to side of dock in T-nuts with washer 1”OD X 3/8” ID stainless steel and 5/16-18 X 1-1/2 Phillips truss head bolt .

Installation

Tools Required:

Phillips Screwdriver

1. Select the set of T-nuts you want to attach the bumper to.
2. Clean out any grit or debris that might have gotten into the stainless-steel inserts in the dock.
3. Secure bumper using two flat washers (117005) and 5/16-18 X 1-1/2” Phillips Truss head Bolts (80515SS).

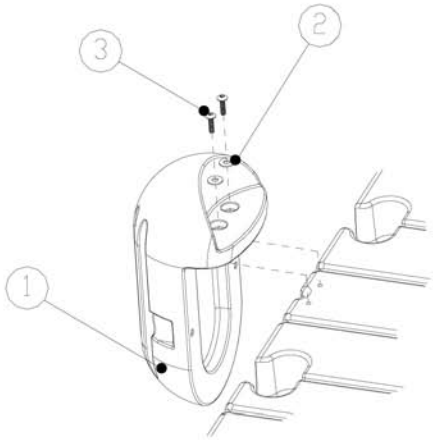

ITEM	QTY.	PART NO.	DESCRIPTION
3	2	80515SS	5/16-18 X 1-1/2" PHILLIPS TRUSSHEAD BOLT
2	2	117005	1" OD X 3/8" ID WASHER
1	1	S30180	DOCK BUMPER

BILL OF MATERIAL

Dock Edging (400117)

Our dock edging is constructed of durable vinyl to provide a soft cushion to protect boats from the sides of docks and vice versa.

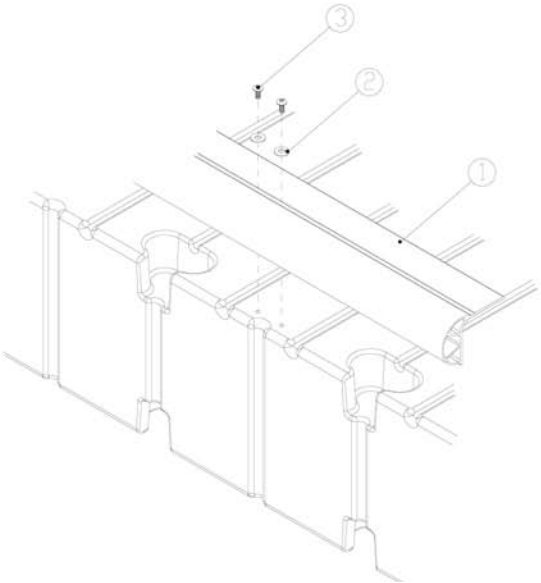

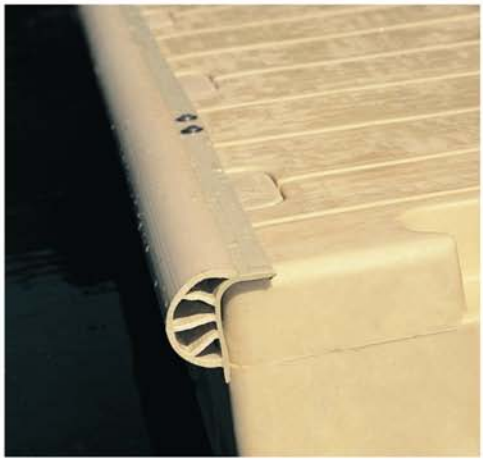

Security Curbing (35116)

The security curbing provides a safe border around dock edges for wheelchairs and attaches in the T-nuts located around the outside perimeter of the dock. Curbing is 116" in length, and you will need to cut, fit, and drill holes in the proper locations. Curbing is made from recycled materials.

Installation

Tools Required:

Phillips Screw Driver

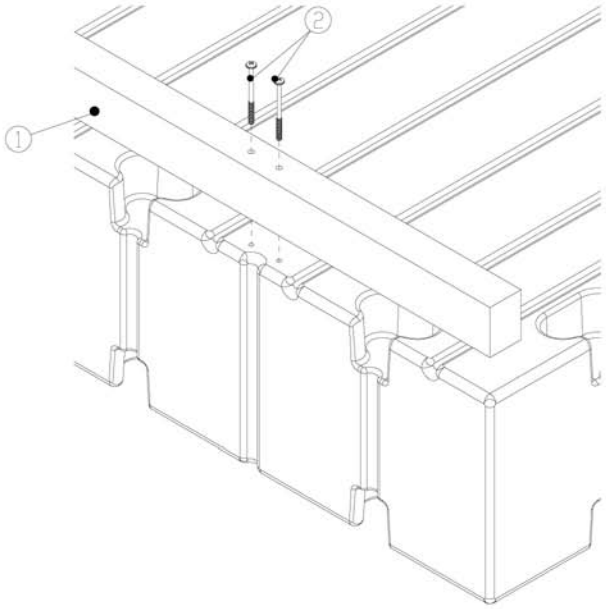

1. Place curbing or vinyl edging on dock section in area to cover. You may need to cut it to fit. Mark T-nut locations and drill.
2. Using 5/16-18 X 3 flathead Phillips bolt (80530SS) and attach into T-nuts. (Part Number 80530SS is sold separately.)

ITEM	QTY.	PART NO.	DESCRIPTION
2	2	80530SS	5/16-18 X 3" PHILLIPS FLATHEAD BOLT
1	1	S35116	2-1/2" X 3-1/2" X 116" PLASTIC CURB

BILL OF MATERIAL

Pocket Filler (201030)

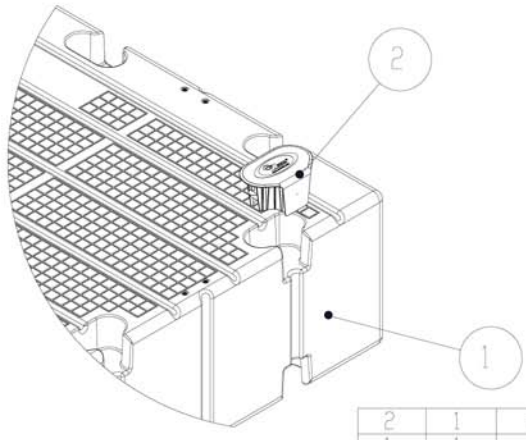

1. Insert pocket filler into coupler pocket.
2. Press or force pocket filler into the pocket until it is fully seated.

IMPORTANT!!!!
All empty coupler pockets must be filled with the pocket filler (201030)

ITEM NO.	QTY.	PART NUMBER	DESCRIPTION
2	1	201030	KIT POCKET FILLER
1	1		DOCK SECTION

Handrails (Galvanized-100910, 100911, 100912, 100913L, 100913R, 100914L, 100914R, 100915, 100916, 100917, 100918, 100919, 100920— Powder Coat Paint-105910, 105911, 105912, 105913L, 105914R, 105915, 105916, 105917, 105918, 105919, & 105920)

EZ Dock handrails conform with SOBA and ADA guidelines. Our railing sections are available in a variety of lengths and Profiles, and are designed to provide security with minimal obstruction. You may choose from the standard hot-dipped galvanized finish, powder–coated color finish, or our new stainless steel option. Models include accessories for securing fishing rods, and are perfect for residential, resort or park installations. Our railing is also available in aluminum or stainless steel by special order.

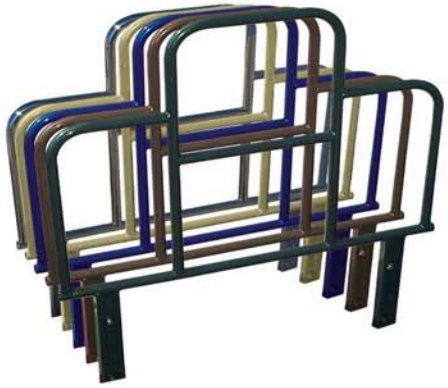

Barrier Free Railing Installation

Tools Required:

Ratchet
5/8" Socket
Hammer

1. Loosely attach hardware connectors to railing legs at the lowest location on the railing.
2. Place hardware connectors in the corresponding top pockets on the dock.
3. Tilting the railing outward and away from the dock at the top, bring the bottom connectors up and into the bottom pockets.
4. When the bottom connectors are fully up and in the bottom pockets, bring the top of railing back towards the dock so the upper holes in the railing legs fit over the bolts in the hardware connector on the top edge of the dock.
5. Secure the railing by fully tightening the nuts on all hardware connectors using care to not over-tighten the nuts.

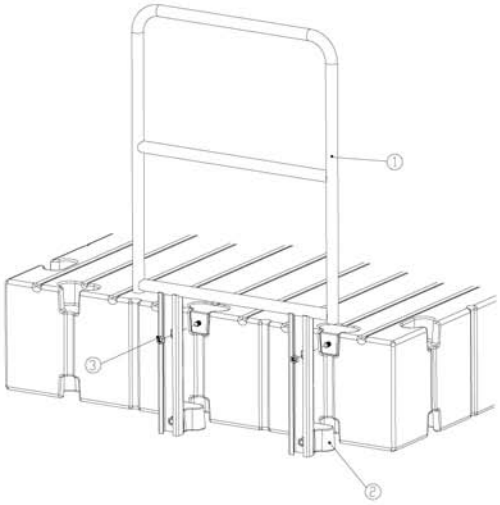

ITEM	QTY.	PART NO.	DESCRIPTION
3		S21140SS	HARDWARE CONNECTOR
2		80580SS	5/8-11 SELF LOCKING NUT
1			BARRIER FREE RAILING

BILL OF MATERIAL

Customer Service Assistance:

When calling for service assistance, please know the purchase date, model and/or serial code of your components. You also need your serial number for product registration. This information will help us to better respond to your request. If you need replacement parts, contact your dealer to obtain only genuine parts. These parts will fit right and work correctly because they are made with the same precision used to build your EZ Dock. To locate replacement parts in your area, call 1-888-654-8168 (US and Canada), 1-417-235-2223 (Africa, Asia or Central- or South America), or +(32) 4 240 0353 in Europe. French speaking residents in Quebec should call 1-800-654-8168. These numbers will put you in contact with your nearest distributor/dealer. You may also locate your nearest distributor or dealer by logging onto the web at www.ez-dock.com.

EZ Dock distributors and dealers can provide assistance with:

- features and specifications of EZ Dock's full line of dock products
- installation information
- use and maintenance procedures
- accessory and repair part sales
- referrals to local dealers

Maintaining your EZ Dock System

Care and Maintenance

Cleaning: Your new EZ Dock Product can be easily cleaned using a brush, mild cleaning agent, and water. For stubborn stains, use a diluted bleach solution. A power washer can be used when convenient. Algae growth at the waterline on the product is normal and will not harm the port.

Ice: EZ Dock floats high enough so that normal ice pressure will not harm the product. However, if the shoreline area has ice pressure pushes, wind blown ice, or other ice flows, the dock needs to be removed or disconnected from the moorings. In these circumstances, pipes or piles should be removed to prevent bending due to ice pressure.

Removal: If EZ Dock is removed at anytime for storage, it should not be dragged over rough gravel or other sharp objects. The EZ Dock product may be stored outside without any special care when stored on edge or with the roller-side facing up.

EZ Dock Limited Warranties

Floatation (8 Years) - Modular dock units and EZ Port lifts are warranted against cracks, breakage, leaks, and ultraviolet deterioration caused by defects in material and manufacturing workmanship for a period of eight (8) years from the date of purchase.

Hardware and Accessories (1 Year) - Hardware and accessories are warranted against defects in material and manufacturing workmanship for a period of one (1) year from the date of purchase.

These Limited Warranties specifically do not cover damages to EZ Dock products caused by: improper installation; use inconsistent with EZ Dock's instructions and product specifications; vandalism; severe weather and natural disaster; impact by watercraft, ice, falling trees, floating debris, and other foreign objects; animals or aquatic life; unauthorized product modification and attachment; and improper repair.

If an EZ Dock product fails under normal use and within the applicable warranty period, Buyer must submit a written claim to either the authorized EZ Dock reseller in Buyer's area, or directly to EZ Dock. Buyer's local authorized EZ Dock reseller can be found by visiting www.ez-dock.com, or by calling 1-800-654-8168. Claims may be submitted directly to EZ Dock at 878 East Highway 60, Monett, MO 65708 USA. Claim forms may be obtained from your local authorized EZ Dock reseller, or may be downloaded at www.ez-dock.com. If a claim form cannot be obtained, claims may be submitted on plain paper. All claims must include, at a minimum, Buyer's complete contact information, the identity of the failed product(s), a description of the claimed defect(s), photos of the defect(s), and copies of dated proofs of purchase/receipts from an authorized EZ Dock reseller.

Upon receiving sufficient proof of covered product failure, EZ Dock will, in its sole discretion, either repair or replace failed products within a reasonable time after notice, and ship, at Buyer's expense, repaired and/or replacement products to the site. "Repair" may be limited to providing a repair kit to Buyer. Costs related to the removal of failed products, and the installation of repaired and/or replaced products shall be at Buyer's expense.

Warranties periods begin on the date of purchase from an authorized EZ Dock reseller. Repaired and replacement products are warranted only for the balance of the original limited warranty period. These limited warranties extend only to the original Buyer of products from an authorized EZ Dock reseller ("Original Purchaser"). Warranties are not transferable to anyone who subsequently purchases products from the Original Purchaser, or to any subsequent purchaser.

In order to ensure proper warranty coverage, Buyer should activate these Limited Warranties by properly registering the purchase of EZ Dock products within thirty (30) days of the date of purchase via the Registration Card provided in EZ Dock's Owner's Manual, or by registering online by going to www.ez-dock.com, clicking "Customer Service" and then clicking "Product Registration".

Buyer, by acceptance and use of these limited warranties, waives any rights it would otherwise have to claim or assert that these limited warranties fail of their essential purposes. Buyer agrees that venue for any court action to enforce these limited warranties shall be in Barry or Greene Counties in the State of Missouri.

THE FOREGOING LIMITED WARRANTY IS THE SOLE AND EXCLUSIVE WARRANTY FOR SELLER'S PRODUCTS, AND IS IN LIEU OF ALL OTHER WARRANTIES, EXPRESS OR IMPLIED, IN LAW OR IN FACT. SELLER SPECIFICALLY DISCLAIMS ALL OTHER WARRANTIES, EXPRESS OR IMPLIED, INCLUDING, WITHOUT LIMITATION, ALL IMPLIED WARRANTIES OF MERCHANTABILITY AND FITNESS FOR A PARTICULAR USE OR PURPOSE, AND ANY IMPLIED WARRANTIES ARISING OUT OF COURSE OF DEALING OR PERFORMANCE OR TRADE USAGE. SELLER SHALL NOT BE LIABLE FOR ANY INCIDENTAL, CONSEQUENTIAL, EXEMPLARY, SPECIAL, OR PUNITIVE DAMAGES, OR ANY LOSS OF REVENUE, PROFIT OR USE, ARISING OUT OF A BREACH OF THIS WARRANTY OR IN CONNECTION WITH THE SALE, INSTALLATION, MAINTENANCE, USE, OPERATION OR REPAIR OF ANY PRODUCT. IN NO EVENT WILL SELLER BE LIABLE FOR ANY AMOUNT GREATER THAN THE PURCHASE PRICE OF A DEFECTIVE PRODUCT.

The First Dock of Its Kind.
THE LAST DOCK YOU WILL EVER NEED.®

The first dock of its kind...The last dock you will ever need®.

For more information call **1-800-654-8168** or go to **www.ez-dock.com.**

DOCKMANUAL-2010-USA

EZ Dock Warranty Registration

Complete the form and mail or log onto www.ez-dock.com, click "customer service" and then click "product registration". If mailing outside the United States, please adhere postage on front.

Purchase Date: _____ Dealer: _____

First Name: _____

Last Name: _____

Address: _____

_____

City: _____ State/Province: _____

Postal Zip Code: _____ Country: _____

email address: _____

Phone (include country code): _____

Model / Serial Number: _____

_____

_____

_____

_____

☐ Check here if you do not want to receive special offers or updates from EZ Dock

NO POSTAGE NECESSARY IF MAILED IN THE UNITED STATES

BUSINESS REPLY MAIL
FIRST-CLASS MAIL PERMIT NO 197 MONETT MO

POSTAGE WILL BE PAID BY ADDRESSEE

Warranty Registration
EZ DOCK, INC.
878 East Highway 60
MONETT MO 65708-9968

Receive a FREE EZ Dock hat when you register your new EZ Dock products!

FRONT Gatefold

Receive a FREE EZ Dock hat when you register your new EZ Dock products!

BACK Gatefold